BRITISH **VINTAGE WIRELESS** SOCIETY

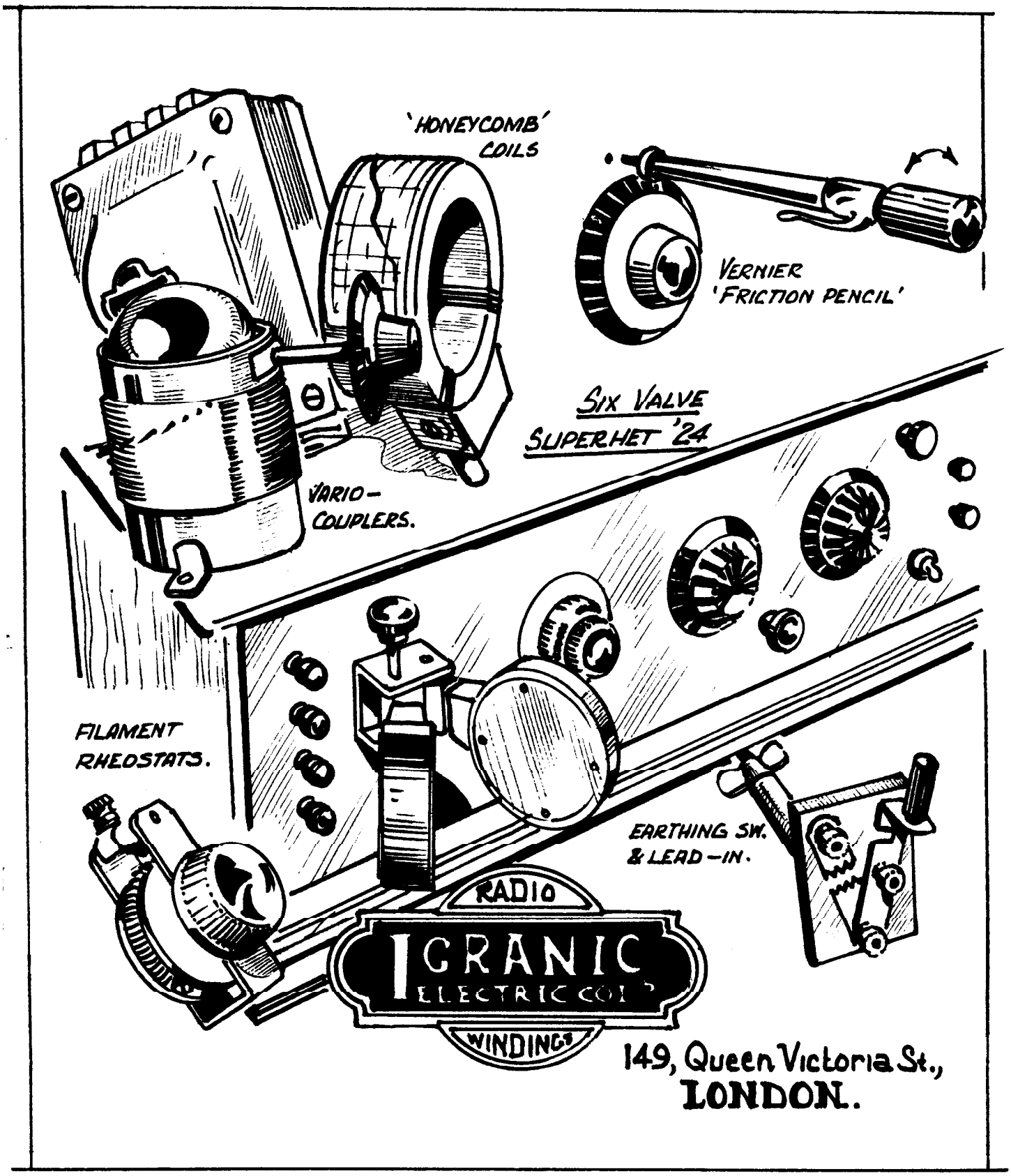

Bulletin Vol.4 No.3 DECEMBER 1979

THE BRITISH VINTAGE WIRELESS SOCIETY

All Bulletin correspondence to: A.R.Constable,
B.V.W.S. Bulletin Editor,
18, Ravensbourne Gardens,
Ealing,
London, W13 8EW Tel: 01 997 7564

Membership applications to: Jonathan Hill,
B.V.W.S. Membership Secretary,
14, Victoria Court,
London, W3 Tel: 01 993 1306

B.V.W.S. publictions (see p 11): Ian Higginbottom,
5, Templewood,
Ealing,
London, W13 Tel: 01 998 1594

B.V.W.S. Chairman: David D. Read,
25, Temple Fortune Hill,
London, NW11 Tel: 01 455 9523

DEADLINE FOR NEXT ISSUE: 20th FEBRUARY 1980 ..... all material welcome

CONTENTS OF THIS ISSUE :

FRONT COVER ILLUSTRATION

The front of this issue shows a number of the well known components of the Igranic Company. The 6-valve superhet illustrated came in a 'kit' form but, for some odd reason, did not include the front panel components .... has any member discovered one of these sets? Igranic also made a 7-valve 'Neutrosonic' a well designed quality neutralised superhet. The circuit details of this set are not available and the editor would be most pleased to hear from any member who knows anything at all about this receiver. A short article on the Igranic Company appears on page 44 of this Bulletin.

BRITISH VINTAGE WIRELESS SOCIETY

Volume 4 Number 3 Bulletin December 1979

EDITORIAL

As long as there is an interest in vintage radio, there will be a market for a certain amount of reproduction material. If a firm chooses to manufacture a small version of some famous radio set with a modern solid state interior there can be no real objection. Such a saleable 'gimmick' would be appreciated by collectors or non-collectors for what it is worth ... it conjurs up the spirit of the past and makes no pretence at being the real thing. One or two such devices are available and appear as 'fun' things in the collector's display. It is another matter entirely when a manufacturer decides to collect old radio sets, strip out the interior, re-spray the cabinet, insert transistorised works and then sell the resulting abortion to the unsuspecting, gullible collector of 'antiquery'. There is one such firm operating in this country and which was visited recently by BVWS member J.A.Williams. Apparently the 'boss' was away when he called and Mr Williams only met what he describes as the 'Sorcerer's Apprentice'.... an apt term if ever there was one! The firm look out for good wooden cabinet sets without L.S. grilles if possible - i.e. pre 1930's. They then proceed to do the darndest things to them and sell them for high prices to the export markets of the world. A G.E.C. cabinet and a Fellows horn were seen alongside a few fake candlestick telephone sets. Of course there is no way of stopping this sort sort of thing ... 'if there is a market for it, it will be made and sold'. But BVWS members should be on the look out for firms of this sort and prevent them getting hold of the stuff - if they can. I am sure John Williams will let you know all the details about this firm if you contact him - and I also will. The objection to this sort of practice is not against fakes or reproductions, it is a fundamental objection to vandalism.

Many BVWS members are now aware that our Society own a substantial number of the components from the historic BBC transmitter at Brookman's Park. It is just fifty years since the transmitter was installed in 1929 and its historical importance as the world's first twin broadcast transmitter is well known. Rather than take the easy way out and have all the components go as a job lot to the scrap merchant the BBC kindly agreed to sell them to BVWS for the sum of £5 plus VAT. We are now wanting to distribute them to members resident in the U.K. and, for the sake of fairness, have decided to hold a draw. Tickets cost £1 and the draw will take place at the A.G.M. in 1980. The money raised will help to defray the costs incurred in collecting and labelling the components ... which range from an impressive copper and wood variometer to a humble porcelain insulator. Please send your £1 to the Bulletin Editor before January 30th ..... one ticket only per member.

Do remember that there is a Vintage Wireless Register held by Mike Field. Send details of your collection to him if you havn't already done so and inform him of new acquisitions. At the moment this still means pre-1930 sets only. Also, do make use of the register by writing to Mike Field with your queries.

AN ACTIVE H.T. BATTERY REPLACEMENT

By Philip Beckley

Most people would agree that H.T. batteries are very expensive and, on the other hand, mains driven battery eliminators are not quite the thing for early 1920's apparatus when one is concerned with 'appearances'.

Lucky owners of Milnes H.T. units or thermoformers may be alright. Adventures with electrolytic rectifiers and smoothing capacitors made up to 1920's specifications can be unfortunate - ammonium phosphate does the cat's fur no good at all!

It is possible to make up a mains driven battery eliminator inside an old H.T. battery cover, but still the mains lead snakes guiltily away from the set to the wall socket. The writer has tackled the problem by converting an old 120volt H.T. battery (13/- inc tax) as follows:

1) Mechanical First procure an old H.T. battery - preferably one with at least five sockets. Carefully remove the cover and set it aside. make up a wooden box about 3/16 inch (approx 5mm) smaller than the original battery 'guts' in each direction. Glue corrugated cardboard to the box sides to pad it up to size. This gives the sides the correct 'feel'. Place the card cover over the box and mark through the tapping socket holes onto the box top. Remove cover, drill 1 inch holes in the box top to a depth of about 1/4 inch (about 6mm) ....(note, the box top is made of 1/2 inch (12.5mm) thick wood). Then drill small holes in the centre of these wells to take brass sockets rescued from old batteries. A tiny hole in the centre of each socket hole should be made so that a wire soldered to the brass socket can lead into the box interior. Press and glue socket tubes in place with wires passing into box interior. (see Fig.1.)

The wells are now filled with black bitumen taken from old battery tops (beware when melting it - it is inflamable) till about 3/16 inch of socket tube is left exposed. When the battery cover is replaced, the battery top now has a 'correct' appearance.

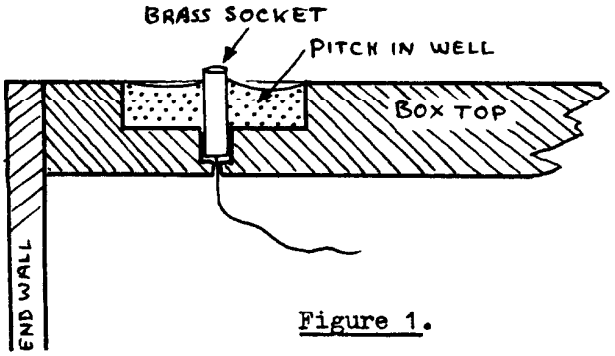

Figure 1.

Some corrugated card could be glued onto the box top (not over the wells, of course) to improve the 'feel' of the battery top. A final touch of authenticity could be provided by gluing waxed brown paper over each well and then breaking through it to reveal the socket just as would happen with a new battery. A bottom lid is prepared for the box to the inside of which is fixed a piece of 1/2 inch thick steel (or equivalent weight) about the size of the box interior floor area. This gives the appropriate weight to the battery.

Eventually, when the 'works' have been fitted, the bottom could be covered with suitable brown paper. Do not fix the base immovably as access to the inside may be needed from time to time.

2) Electrical

(i) General The writer wanted to power his H.T. 'battery' from the L.T. supply to a set of bright valves using a 6-volt accumulater so the design centres round a DC-DC converter with 5volt input. An equivalent device working from a 2volt line is feasible but accumulator drain at 2volts is very heavy and efficiency must be poor since transistors will have some 0.4 volts or more base-collector volt drop when 'on' and this is quite a bit out of 2.0 volts when there are other ohmic losses etc.

2volt synchronous vibrators were used in WW2, but they have their own problems.

Consequently a 5volt supply is used as the basis of design and this can come from the valve L.T. supply if bright emitting valves are used, or from an internal rechargeable Ni-Cd battery if this is more appropriate (see below).

(ii) Circuit A comparatively inexpensive DC-DC converter is found in the type used to power gas filled digital display tubes from a 5volt computer power line.

The one used by the writer was a Beckman VC525. Its specification is for about 180volts output, up to 15mA for 5volts input at 1.25 A max. The unit is approx 1.5 X 1.5 X 1 inch (about 37 X 37 X 25 mm) and its output is adjustable over a limited range.

A small circuit board is made up to carry the circuit shown in Figure 2. The two output voltages are 70 and 130 volts which gives 60 and 120 volts effective if a passive grid bias system (see last Bulletin p. 26.) is in use which causes some loss of effective H.T.volts. The 5.1volt 10watt Zener diode across the input protects the converter against reversed polarity and excessive input voltage. In either case the Zener will pass a lot of current and blow the fuse. The wired up unit is fixed in the battery box, wired as in (iv) below, after a bench test.

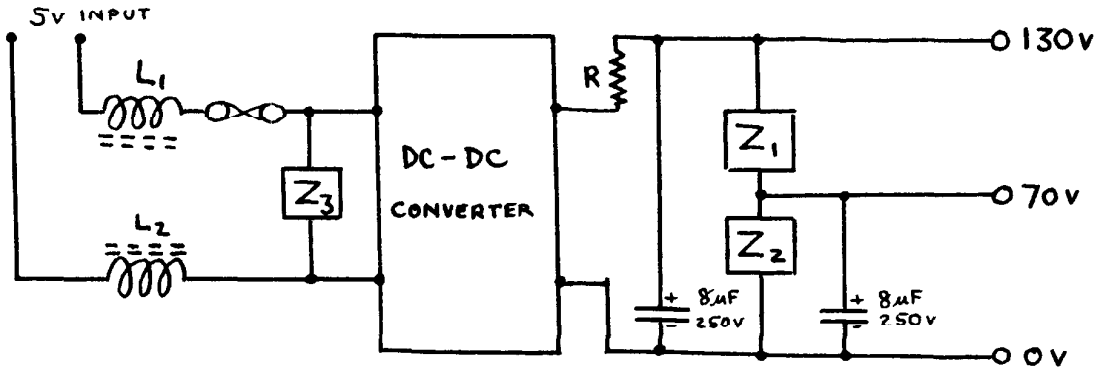

Z_1 = 60volt 1.3 watt Zener diode
Z_2 = 70volt 1.3 watt Zener diode
Z_3 = 5.1volt 10 watt Zener diode
} Wired with appropriate polarity.

R is a feed resistor, about 5 kΩ, 5watt size to run with cool surface. Probable voltage drop on R is say 50volts at 10mA. But measurements should be made to set Zeners at correct operating current and not overload converter etc.

Figure 2.

(iii) Interference It was found that quite a lot of broad band noise was generated by the converter and this was re-radiated from the input leads. The two chokes, L_1 and L_2, each consisted of about 20 turns of thick wire wound on a 1 inch (25mm) length of ferrite rod and provided an adequate restraint of interference. Very sensitive sets may need better filtration and screening. No special efforts were made at filtration optimisation and bifilar chokes etc could be useful.

(iv) Connections *The writer uses the 0, 60v and 120v sockets for supplying* the radio set and the 72v and 108v sockets for feeding 5volts into the 'battery' via two leads with appropriate plugs on them coming from the guts of the set and fed as in Figure 3.

Rs was chosen to provide 5volts to the H.T. 'battery' input when the valves were correctly lit. Rs is an actual component of the Marconiphone V3 ... for other sets it may need to be concealed in various ways.

(v) Other L.T. supplies Some users may prefer to fit a modern 5 or 6volt Ni-Cd battery inside the box and arrange for the two 72 and 108volt sockets to be fed from the 2volt filament line to switch on the H.T. when L.T. is applied to the set by use of a small relay internal to the 'batterry'.

The Ni-Cd battery could be recharged on the bench at intervals using power fed into an appropriate arrangement of sockets selected from the unused ones on top of the H.T. 'battery'. This method would be useful for 'portable' sets such as the Marconiphone 55 portable. A better scheme may be to use a 5volt based converter in the 55 portable but a 6volt motorcycle battery for the filaments in association with an appropriate solid state voltage regulator to feed 2volt valves.

3) Review The writer has found that the small inverter described gives quite enough output for a Marconiphone V3 set, and indeed 15mA should suffice for most purposes. H.T. batteries made up from 4.5volt pocket lamp batteries in 1920's style cost a fortune to keep up especially if utilization is poor so that the cost per hour of usage becomes terrible.

An active H.T. 'battery' and a passive grid bias 'battery' (as described on p. 26 of the last issue of this Bulletin) allows a good authentic appearance to be maintained without falling back completely on the mains lead, and performs in a way which is indistinguishable from 'real' batteries.

A random noise generator to simulate failing battery cells was designed, but eventually rejected as taking fakery just a little too far!

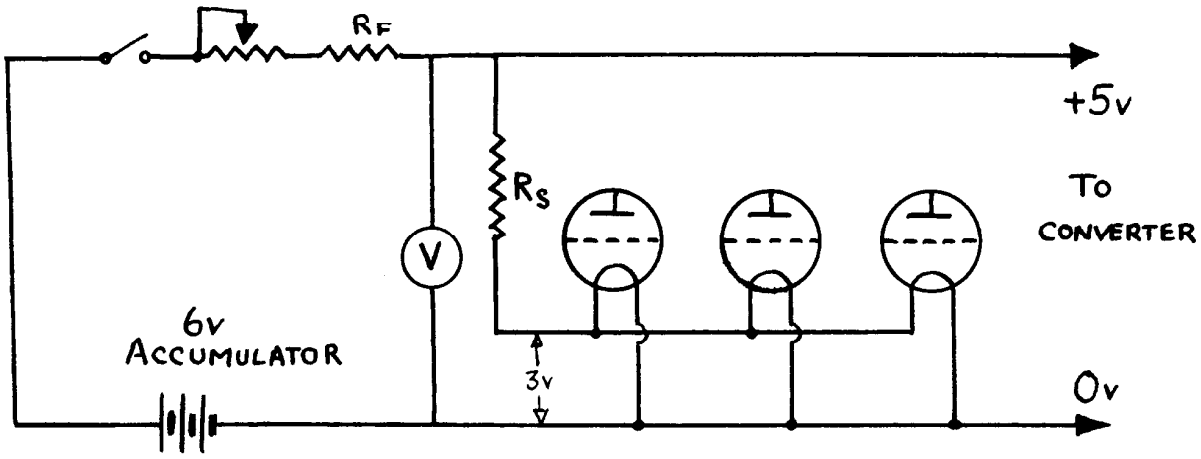

Circuit arrangement for 3volt bright valves fed from 6volt accumulator.
R_s adjusted to give V_{fil} = 3volts and 5volts for converter.
RF is such that with rheostat all out V_{fil} = 3.0volts when accumulator is 'low' at 5.9volts.
Rheostat is used to bring valves smoothly to operating temperature.
Voltmeter optional to ensure correct voltage is achieved.

Figure 3.

PROFESSOR DAVID HUGHES - 1879

In the March issue of the Bulletin (Vol. 3. No.4. March 1979) an editorial was devoted to the subject of David Hughes's experiments of one hundred years ago when it appears that he anticipated the discoveries of Hertz. The exact role of Hughes is frequently debated and my own view is that this is not so much the story of a great discovery but the story of a missed opportunity. Hughes could not have done more than he did - but the recognised leaders of the scientific community did far less than they should. Keith Geddes of the Science Museum presents the following discussion of the subject with all the clarity that the subject deserves. We are grateful to him and to the British Society of Audiology in whose journal it appears (Supplement No. 2, Brit. J. of Audiology, November 1979). Editor

HUGHES'S PLACE IN THE HISTORY OF RADIO

For acknowledgement see foot of p. 36 By Keith Geddes

The experiments that were to establish Hughes as a pioneer of radio communication (albeit a marginal one) took place in the autumn of 1879, when Marconi was a child of five. The possibility of radio waves had been predicted by Clerk Maxwell in 1864 (1); he had postulated an electromagnetic theory whereby fields propogated as waves, with a velocity that worked out to be close to the known velocity of light, and had suggested that there might well exist other electromagnetic waves besides those that were directly detectable by our senses.

In the absence of any experimental evidence for such waves, Maxwell's theory won little support, even among the minority of scientists capable of coping with its mathematical complexity, until 1887-8, when Heinrich Hertz's classical experiments (2) established that high-frequency electric currents did indeed produce waves; moreover, these exhibited the properties of light waves, but at wavelengths many orders of magnitude longer.

Hughes was outside the circle of theoretical physicists, so it was not to be expected that when he stumbled across evidence of electromagnetic waves, eight years before Hertz's work, he would appreciate its full significance. His discoveries came about because two of the devices with which he was experimenting happened to be capable of functioning respectively as a radio transmitter and a radio detector.

The transmitter was his induction balance (3) - a device for indicating the inductive effect produced when a small sample of metal was inserted into an air-cored transformer. It contained two similar transformers, their primaries in series with each other and with a battery, the circuit being periodically opened and closed by a clockwork interruptor. The secondaries were in series with each other and with a telephone, the sense of the connection being such as to give opposition of the inductive impulses produced when the primary circuit was switched. The transformer had a screw that allowed adjustment of its coupling, and after this had been used to produce silence in the telephone the sample to be assessed was inserted into the other transformer. The loudness of the sound produced by this disturbance of the balance was then matched by the associated sonometer, whose reading thus indicated the magnitude of the inductive effect. It was the high-frequency oscillations produced by the interruptor that caused the induction balance to function as a 'spark' radio transmitter.

Hughes's detectors were his microphones which, as imperfect contact devices, were capable of acting either as 'self-restoring coherers' - circuit elements whose DC resistance decreased in the presence of an r-f voltage - or, in the case of microphones where the contact was between dissimilar materials, as a rectifying detector; this latter type seems to have been the one principally involved.

For an experimenter to encounter radio phenomena it is of course necessary for him to be operating his transmitter and his receiver simultaneously, and since Hughes was not using a microphone in his induction balance this condition should not have been fulfilled. But one day he was unaccountably unable to secure the usual silence during the initial adjustment of the balance. He traced the trouble to a loose connection in the telephone circuit, but instead of simply putting it right and carrying on, as most people would have done, Hughes decided to investigate, and in order to bring the experiment under better control he substituted one of his microphones for the accidental loose contact.

He soon discovered that the telephone/microphone circuit responded to the current impulses even when separated entirely from the interruptor circuit (though each was earthed to a gas or water pipe), and he eventually satisfied himself that neither inductive nor electrostatic coupling was responsible. He concluded that he was dealing with some form of abnormal conduction through the air, and over a period of some months, concurrently with work on other projects, he investigated the distances over which the phenomenon could be observed. There is some uncertainty (see below) as to just how great a range he achieved, but it may well have been hundreds of metres.

After giving a number of demonstrations to other workers in the electrical sphere, Hughes brought his experiemnets to the notice of the Royal Society, and the significance of the resulting episode justifies quoting in full the relevant entries in his

notebook (4):

Feb 20th 1880. Mr Spottiswoode, President of the Royal Society, Prof. Stokes and Prof. Huxley, visited me to-day at half-past 3 p.m. and remained until quarter to 6 p.m., in order to witness my experiments with the Extra Current, Thermopile, etc*. The experiments were quite successful, and at first they were astonished at the results, but at 5 p.m. Prof. Stokes commenced maintaining that the results were not due to conduction but to induction, and that results were then not so remarkable, as he could imagine rapid changes of electric tension by induction. Although I showed several experiments which pointed conclusively to its being conduction, he would not listen, but rather pooh-poohed all the results from that moment. This unpleasant discussion was then kept up by him, the others following his suit, until they hardly paid any attention to the experiments, even to the one working through gas pipe in Portland Street to Langham Place on roof. They did not sincerely compliment me at the end on results, seeming all to be very much displeased because I would not give at once my Thermopile to the Royal Society so that others could make their results. I told them that when Prof. Hughes made an instrument of research, it was for Prof. Hughes's researches and no one else. They left very coldly and with none of the enthusiasm with which they commenced the experiments. I am sorry at these results of so much labour but cannot help it. D.E.Hughes

Feb 21st I wrote to Mr Spottiswoode that my opinion, firmly based on true experiments, that it was conduction and nothing else; so I have made matters worse, and may expect nothing more from them, except that they will probably copy my apparatus and make their own experiments. Adieu.

Stokes was Lucasian Professor of Mathematics at Cambridge, and also an eminent Physicist, and his critical attitude greatly discouraged Hughes. Though Stokes suggested that the experiments merited a paper, Hughes never submitted one, nor did he do much more work on the subject.

It was not until 1899, and then very much by chance, that the story of Hughes's experiments was published. By that time, an Irish writer, J.J.Fahie, had decided, perhaps a little prematurely, to write A History of Wireless Telegraphy (5). One of the many published articles that he quoted was a piece that Sir William Crookes had written for Fortnightly Review in 1892 (6). In it, Crookes prophesied many of the features of wireless telegraphy, and in justification of the assertion that such communication was 'no mere dream of the visionary philosopher', he recalled:

"....some years ago I assisted at experiments where messages were transmitted from one part of a house to another without an intervening wire by alsmost the identical means here described."

The diligent Fahie wrote to Crookes to ask for amplification of this remark, and was directed to Hughes, by now an old man. Hughes's response to Fahie's subsequent enquiry was a letter of some 2000 words outlining the experiments of twenty years before. This letter, incorporated in Fahie's book and also published in The Electrician (7), has remained the definitive account of the experiments, supplemented by a piece published shortly afterwards in Electrical Review (8). The author was a Mr. Munro, who had witnessed some of the 1879 experiments. Munro visited Hughes and looked at some of his notebooks. His account was more exhuberent than Hughes's own, and this tendency seems to have affected fact as well as comment. Thus, Hughes describes his most spectacular experiments in these words:

"After trying successfully all distances allowed in my residence in Portland Street, my usual method was to put the transmitter in operation and walk up and down Great Portland Street with the receiver in my hand, with the telephone to the ear. The sounds seemed to slightly increase for a distance of 60 yards, then gradually diminish, until at 500 yards I could no longer with certainty hear the transmitted signals."

In Munro's account this becomes, "The clicking of the transmitter could be heard for a distance of 500 yards up or down the street....."

Hughes died the following year, and The Electrician, in its obituary (9), made this

---

* 'Extra Current' was Hughes's rather arbitrary name for the whole phenomenon of anomolous reception in the telephone; the thermopile was in some experiments used in preference to a microphone as the detecting element.

reference to the experiments:

".....it is not too much to say that he discovered the essential principle of wireless telegraphy. Unfortunately, the discovery was not published at a sufficiently early date, for it was only on May 5th last that the first public announcement of this fact was made, in an article contributed by Prof. Hughes himself to The Electrician. This article abundantly proved his claim to have been the first to transmit actual signals over a considerable distance by means of electrically generated ether waves; which is, in fact, the basis and essence of wireless telegraphy on the Marconi system..."

In 1922, Hughes's widow died, bequeathing his notebooks to the British Museum, which had them assessed by a noted electrical engineer, A.A.Campbell Swinton. He recommended acceptance of the bequest, endorsed Hughes's 1899 account of the 1879 experiments and published for the first time the entries for 20 and 21 Feb 1880 (see above) (10).

This development in 1922 may be said to have confirmed Hughes's place in the footnotes to the History of Radio, as a modest man deprived of his rightful place in the main text through the unhappy encounter with Professor Stokes. It left Prof. Stokes in the role of a man whose opinionated wrongheadedness had held back the advent of radio communication by a decade, notwithstanding a spirited yet tactful letter in his defence, written by his successor at Cambridge, Sir Joseph Larmor, and published in Nature (11).

My own researches are confined to one day's perusal of the relevant volume of Hughes's notebooks. Though conclusions based on such slender foundations must be tentative, I must record that there is no mention of the perambulations up and down Great Portland Street on which rest the claims of ranges approaching 500 yards. Indeed, the experiments described are either of success in spanning ranges of a few metres, or of unsuccessful attempts at much longer ranges:

"Tried at home again by taking the receiver down to the W closet could then hear perfectly well quite equal to upstairs if not better." (12)

"....the whole atmosphere is influenced even to the great distance of 15 metres with the door closed - closing the door makes not the slightest difference." (13)

"Tried receiver at Mr Groves 500 yards distant could not hear the slightest trace of sound, using 6 elements & 3 coils in transmitter in Portland St. Thus the current does not travel any great distance and most likely the effect is altogether due to air circuit. Anyway, the effect is only local - and I see no hopes of its usefulness." (14)

There is a significant addition to the notebooks. Stuck in, among the 1879 entries(15), is a small piece of paper dated 30 Novemebr 1897 - that is, well after Marconi's debut, but before the approach from Fahie. It lists, with dates, "Persons who saw my Aerial Transmission Experiment." So, notwithstanding his public indifference to questions of priority, Hughes felt impelled to state his case, perhaps merely for his own reassurance, perhaps to be ready should the occasion for speaking out ever arise.

What conclusions can be drawn from the lacunae in the notebooks? My own guess is that the missing experiments were recorded only in a small pocket book or even on scraps of paper, and that they were already missing in 1899. In his letter to Fahie, Hughes says:

"I will not describe the numerous forms of the transmitter and receiver that I made in 1879, all of which I wrote down in several volumes of manuscripts in 1879 (but these have never been published), and most of which can be seen here at my residence at any time;...."

To me, 'most of which' means 'except for some that I can't find!'.

There is one piece of internal evidence to suggest that the notebooks are incomplete. That is the second word 'the' in this passage from the entry for 20 February 1880 (qv):

"....they hardly paid any attention to the experiments, even to the one working through gaspipe in Portland Street to Langham Place on roof."

This was evidently an experiment that he had done before - something of a 'set piece', even. Yet I could find no reference to it elsewhere in the notebooks.

I do not think we need greatly reduce our estimate of what Hughes actually did. But the 1899 accounts by Hughes and Munro imply that the claims they contain are not mere memories recalled from twenty years before, but paraphrases based on surviving notebooks; moreover they have been generally interpreted on this assumption. Once there is any doubt that this is so, the extent to which Hughes may be said to have anticipated

the generally recognised pioneers of wireless telegraphy becomes much more a matter of subjective judgement.

References:

1) 'A Dynamical Theory of the Electromagnetic Field' reprinted in vol II of The Scientific Papers of J Clerk Maxwell. W.D. Niven, ed., Cambridge, 1890.

2) 'Electric Waves' by Heinrich R. Hertz, tr. D.E.Jones; Macmillan & Co. 1893

3) 'On an Induction-Currents Balance, and Experimental Researches made therewith', D.E.Hughes. Proc. Roy. Soc. Vol XXIX, 1879, pp 56-65.

4) British Library, Dept of Manuscripts, Catalogue ref Add. MS.40, 161; pp 262v & 263.

5) 'A History of Wireless Telegraphy' by J.J.Fahie; London, Blackwood, 1899

6) Fortnightly Review, February 1892, p 173.

7) The Electrician, 5 May 1899, pp 40-41

8) Electrical Review, 2 June 1899, pp 883-885

9) The Electrician, 26 January 1900, pp457-8

10) Journal of the Institution of Electrical Engineers. Proceedings at Commemoration Meetings, 1922, pp 492-494

11) Nature, 1 April 1922, p. 410

12) British Library, loc.cit., p 212v. 13) Ibid p 236. 14) Ibid p 246. 15) Ibid p 230v.

FROM THE EDITOR'S BOOKSHELF

Man of High Fidelity (Edwin Howard Armstrong) by Lawrence Lessing. Bantam Books 1969 272pp.

This paper back book was first published by J.B.Lippincott in 1956 and, as far as can be judged, is still available in the Bantam version. The 1969 U.S. price was $1 and, I must say, it is quite a dollar's worth of reading. On the cover we read, "The story of the greatest American inventor since Edison, Edwin Howard Armstrong, the man responsible for FM radio ", and among the comments on the back cover we read that this book is "....the startling revelation of a broadcasting company's challenge to the inventor's right to the rewards of his own invention". There is no doubt that when we talk of Armstrong, we are talking of a man who, quite universally, is accepted as one of the greatest pioneers of radio in the world. Doubt may linger in the minds of historians as to the greatness of many other well known names of radio such as, Popov, Lodge, Marconi and de Forest and debate may continue as to the exact contribution these men made. But little debate surrounds Armstrong either in the matter of the exact contributions he made or in the question of his inventive genius. This book covers such important contributions as the regenerative circuits, the super-regenerative circuit, the super-heterodyne and frequency modulation. It is quite fascinating to read how these ideas emerged and readers will be impressed by the wealth of historical detail. Like many American biographies this book is perhaps too verbose and the author takes far too long to get to the point in each chapter. This does not detract too much from the book on one's first complete reading but it makes it very difficult to use as a reference work. There is no index and there are very few references to original sources - just a short list of Armstrong's papers. The battles which Armstrong had through the American courts are dealt with in considerable detail again emphasising the reputation of the radio industry in pioneering the sport of being unkind to its inventors. Armstrong chose to end his legal battles by walking out of a thirteenth story window in 1954. But his wife Marion continued the fight to establish him as the inventor of FM and final vindication came as late as 1967. So it seems that, although history holds no doubt about the role of Armstrong, litigation hungry company lawyers did try to debate the issue....they attempted to re-write history.....and failed. Find the book and read it. A.R.C.

Elements of Storage Batteries by Cyril M. Jansky and Harry P. Wood. McGraw-Hill, New York. 1923. 241 pp

For those wireless enthusiasts who feel they have to operate their vintage sets with storage batteries (or accumulators as we call them in Britain) here is a book of just the right period from which to glean a mountain of information. The theory of lead acid accumulators and nickel-iron alkaline batteries is dealt with in some detail and in a manner which is clear and understandable. There is a very detailed section on the maintenance of storage batteries which should appeal to readers whether thinking of their wireless batteries or, that sensitive subject at this time of year, the car battery. The sort of detail that these authors give is far beyond what we are used to these days and could well stimulate the practical guy thinking of setting up a 'backyard' business restoring old batteries. You are told how to clean batteries, how to deal with new batteries, how to dismantle batteries, how to assemble batteries, how to store them, install them, replenish the electrolyte etc etc. There is also a fascinating section on the subject of battery diseases in which a most careful account is given for regenerating sulphated plates (briefly outlined in our first Bulletin, Vol. 1, No. 1 p2). All sorts of details are given on the subject of battery chargers and, although it is a simple matter these days to rig up a solid state charger, should whet the appetite of those purists who wish to indulge in vintage style charging circuits. The book was prepared in the Extension Division of the University of Wisconsin and was intended as an elementary (though serious) textbook and it is well indexed. This is a book well worth looking for. There are few to equal it and, in my recent look at the modern battery books at the British Library (the old Patent's Office library), not one came even close to achieving the same balance of understandable battery theory and sound practicality. Hope you find a copy. A.R.C.

TRANS-ATLANTIC LETTER

From Dave Brodie

Annual conferences seem to roll around each year with greater rapidity. Certainly the 1979 National Conference of The Antique Wireless Association (AWA) was not an exception. Once again the resort town of Canandaigua, State of New York, was the scene of this outstanding event. Attendance exceeded 600 and the flea market and auctions were busier than ever which indicates that interest in our 'obsession' has certainly not yet abated. Although the conference did not formally commence until September 27th, the early birds started arriving several days before that date and the flea market was quite busy by the middle of the week. Technical sessions commenced Thursday evening and the conference ended two days later after the Annual Banquet on Saturday evening.

Program The technical sessions covered a wide variety of interests including the first paper given on commercial activity in Canada. Another 'first' was a program led by Ms Lou Moreau during which she demonstrated with slides the dramatic increase in the involvement of women in the field of communications over the last 100 years. An illustrated show depicting amateur equipment of the 30's was well received as was a demonstration of early television using a Nipkow disk. Another slide show provided a pictorial history of early valves and finally, the ever popular session on restoration and repair of equipment concluded the program.

Auctions As usual, two auctions were held, one for general equipment and the other for valves. The former grossed about $15,250 and the latter about $2,200. As the AWA museum receives 10% of the proceeds, it is encouraging to find that the auctions are so well received. I have been advised that a few pieces of U.S. antique equipment appear now and then at B.V.W.S. meets. I will therefore again list a few of the many items sold at auction and indicate the prices realized.

Equipment Atwater Kent (Model 10) $360; Crosley (Model V) $180; Aeriola Sr with WD11 valve $180; Erla single valve $145; Bristol Horn $80; Western Electric Horn $65; Music Master Horn $175; De Forest 7A $285; Crosley Pup $185.

Valves De Forest Audion (two good filaments) $200; Moorehead $35; UV 202 $15; WD11 $19; UV200 Brass base $16; W.E. 215A $15; W.E. 205D $5.50; Tubular Audio - tron (two good filaments) $50; 01A's $3; V.T.1 $11; V.T.2 $15; W.E.102F $11.

Equipment Contest The ever-popular equipment contest brought forth a large number of sets and other artifacts dating back to 1893. U.K. sets were quite prominent and distinguished themselves by capturing awards in two categories; a Delaphone No.1 took second place in the crystal set category and an Edison Bell crystal set and amplifier gained second place in the special category covering Edison's contributions to radio etc. The coveted best of show award was won by a most worthy entry....a complete radio station from a W.W.1 submarine chaser.It was almost unbelievable to see this huge antique radio treasure in our contest.

A.W.A. paid tribute to Thomas Alva Edison during this conference in commemoration of the 100th anniversary of his invention of the first practical incandescent lamp. A special session for this purpose was held on Friday evening and a remarkable collection of Edison artifacts were on display in the equipment contest which covered the period 1893-1914.

The annual banquet taxed the capacity of the dining room and was, of course, the prime social event of the conference. In addition to recognising distinguished radio pioneers, we were honored by the presence of curators from the following prestigious museums: The Canadian National Science Museum, Ottawa, Ontario; The Smithsonian Institute; the Ford Museum. Truly a conference to be remembered.

Publications The Montgomery Ward Catalogue The Montgomery Ward Company has been in existence in the United States for many years and at the present time is one of the leading retail chain store operators in the country. During 1922 the company published a 34 page catalogue (7" X 9" approx) which advertised 'Wireless

Telephone and Wireless Telegraph Equipment' available at the company's stores. A worthwhile reproduction is now available. The catalogue provides a wealth of pictures and data on a number of sets and many components of that era. If interested, you can't go wrong at the nominal price of $0.70 plus postage. Contact: Klipsch and Associates, Inc., Box 688, Hope, Arkansas 71801, U.S.A.

Dr. Nikola Tesla Bibliography The following information was taken from a publishers release and is not based on a review of the book by me. It is a recent publication and has not yet appeared on the shelves of local bookstores.

"An exhaustive edition of an annotated bibliography of writings by and about Nokola Tesla (1856-1943). The period covered is from 1884 through 1978. Approximately 3,000 citations are included and arranged chronologically, plus a complete list of U.S. patents granted to Tesla, arranged by date of application. All earlier, lesser bibliographical efforts have been merged in this edition, with both North American and European sources cited.....". The book has 230 pages and is priced at $18. I suggest you contact me if interested since the publisher is located nearby and I may be able to expedite delivery ...(postage extra).

Tesla's Technology This is the name of a new magazine published six time a year (8½ X 11 inches) printed offset. It is my understanding that each issue contains a feature article, a reproduction of a Tesla patent and of an old article by Tesla, serial articles, noticies and classifieds. Subscription cost $10 yearly. Contact: Tesla Research Society, 151, Grofftown Road, Lancaster, Pennsylvania, 17602, U.S.A.

Silver Ghosts by J.W.F. Puett This is a soft-bound publication which provides 72 pages of photographs, circuits and technical information on all the classical models of the justly famous Scott radios. Commencing with the eight valve 'World's Record Super 8', c 1925, the book takes the reader through to 1941. From about 1930, the chassis were constructed of heavy chrome-plated steel and thus became known as 'Silver Ghosts'. Perhaps the largest receiver of its kind ever built was the 40 valve Scott Quaranta which was built to order during 1925 and which is discussed at length in this publication. Contact Puett Electronics, P.O. Box 28572, Dallas, Texas, 75228, U.S.A. Cost, $8.95.

Vintage Radio 1887-1929 $8.95 A Flick of the Switch 1930-1950 $8.95

Again I call your attention to these publications because they are the 'bibles' of the American Collector. They are no longer in print and the Vintage Radio Company ceased operations on July 31st, 1979 (as announced in my letter in BVWS Bulletin, Vol 4, No.1 p13) However, the remaining stock is being liquidated and this may be your final opportunity to get these publications from the original source. Reprints of 'Gernsback's 1927 Radio Encyclopedia' are also still available in DeLuxe hard-cover for $14.95. Contact: McMahon Vintage Radio, Box 1331, North Highlands, California, 95660, U.S.A.

. . . . . .

Please don't hesitate to get in touch with me if you need help in locating U.S. schematics, valves, or equipment. I shall be delighted to assist.

Dave

B.V.W.S. PUBLICATIONS

We have, with the aid of Gordon Bussey and the Andress printers now produced our second 'fascimile' catalogue.....the T.M.C. catalogue enclosed with this Bulletin. Other publications still available:

The Marconiphone 'fascimile' catalogue	.....	price £3.00
A few BVWS wireless posters (1930's)	.....	.50p
ditto (1946-56)	.....	.50p
The Wireless World valve data sheet	.....	1.00
Back numbers of the BVWS Bulletin (vol 1 not available)..		1.00 each

Please order these items from Ian Higginbottom, 5, Templewood, Ealing, London W13. Make cheques payable to B.V.W.S.

THE IGRANIC ELECTRIC COMPANY LIMITED

By A.R.Constable

In pre wireless days, the Igranic Company specialised in the manufacturing of electrical switch gear. Such equipment conjures up visions of heavy engineering devices erected on solid foundations .... visions well represented by the materials iron and granite which, in combination, provide the clue to the origin of the name IGRANIC. The company was founded and controlled by George Mower, an American financier who lived in Belgravia. The company's general manager was a Mr A.H.Curtis who, by all accounts was not an easy man to get along with. To some of his employees, Mr Curtis appeared positively offensive and this is thought to have been due in part to the bad relations which existed between him and the inscrutable George Mower. Whatever the reasons, Curtis prevented the company from growing to full stature in the active period of development of radio industries in the 1920's. There is the story of at least one highly skilled engineer, Ward Miller, who came to Igranics from Columbia to undertake the detailed design work of Igranic components and who resigned after about 10 months because he couldn't stand the offensive manner of Mr. Curtis.

Judging from the number of Igranic components, and coils in particular, that are to be found today in the hands of enthusiastic collectors, the company certainly achieved a measure of success in marketing. Igranic's prime interest in the radio business was in providing components to the constructor market. In the early 1920's when money was in short supply and a multi-valve radio set was very expensive, it seems that constructors were prepared to spend almost unlimited funds on components. Each component was very expensive by today's standards but, over a period of several months, a man on quite a small income could accumulate enough components to build himself a very elaborate receiver. Such a receiver was still a very expensive set but the cost had been spread over a long buying period and the constructor had the great satisfaction (though often extreme dismay) of doing the job himself. But, despite certain illogicalities, the component industries thrived and Igranic was one of the foremost names in the business. The honeycomb coil with its 'duolateral' windings came in all sizes and is probably the most famous of all Igranic components. The company also made filament rheostats, variometers, single and multiple coil holders, intervalve transformers, gimbal mounted coils, fixed condensers, a very smart four pin plug-in H.F. transformer also wound in honeycomb fashion and, finally a range of short wave coils which had their bare turns electrically and mechanically separated by a cunning interweaving through a piece of celluloid.

Although components were the company's main interest one or two radio sets were marketed....at least in kit form. In 1926 the company produced a 4-valve short wave set which was designed under the guidance of Mr Kenneth Alford. Mr Alford joined the Igranic Co. in 1924 as their chief technical consultant and remained in this position for eight years during which time he was concerned with no less than 32 letters patent and had some part to play in almost every device manufactured by Igranics. The Igranic short wave coils came into being as a result of an article written by Mr Alford in Wireless World concerning the need for such coils for receiving American stations. He financed the first 250 himself and was offered 2½% after that by Curtis....which was apparently never received and the company remained in his debt to the tune of about £1000. After having recently talked with Kenneth Alford about this and other matters, I feel a special attachment to the four short wave Igranic coils (covering the range 10-100metres) in my collection.

Another well known name associated with the Igranic Co. was P.W.Willans who came from Marconi's and had already achieved some fame as the designer of the 'Ideal' transformer. Curtis was not very pleased on one occasion when he was going through his invoices, "What's going on 'ere", he said when he saw that Mr Willans had spent no less than £397 in purchasing an L.F. bridge. Willans was a serious

designer and needed good measuring equipment - a message not easy to get over to Mr Curtis. Willans designed Igranic's impressive 7-valve Neutrosonic neutralised superhet for which there are no circuit details and no photographs immediately available. Igranic also produced a 6-valve 'kit' superhet which was developed as a joint effort by the company's design team. The wiring diagram of this set is reproduced below and was taken from an article (Popular Wireless and Wireless Review, March 13, 1926, p 115) by Mr E.J.Simmonds, a well known 'ham'. Mr Simmonds begins by discussing the general advantages of the superhet idea. He then goes on to describe how the Igranic 6-valve superhet has been under test at his station for some time. He continues, "This receiver gives real loud-speaker reception of all B.B.C. and many Continental stations on a frame aerial with exceptional purity of reproduction and it is recommended that H.T. accumulators should be used to provide the necessary H.T. current, as much greater reliability is thereby obtained. The oscillator unit normally supplied with the outfit has a wave-length range of 215-625 metres. Three distinct oscillator units can, however, be obtained, giving reception over a continuous range of wavelengths between 215 and 4500 ohms" (BVWS theorists should not ponder for too long over the 'ohms' ... it was one of those delightful P.W. misprints that one occasionally comes across.) The circuit is reproduced below (readers should be able to 'translate' this). Simmonds gives a fairly detailed account of the circuit and readers should consult this source for further information.

The writer of this short account of the Igranic Co. wishes to thank Mr Kenneth Alford for providing most of the material. Mr alford has been a 'radio man' since 1911 when he constructed his first crystal receiver. He worked at the Royal Aircraft Establishment during the first world war. When the General Electric Company claimed in an advertisement (December 1925) that their "DET.1 was the first dull emitter valve to communicate with Australia at an input of 66 watts.." they were referring to Kenneth Alford (G2DX) a pioneer in establishing radio communication with Australia.

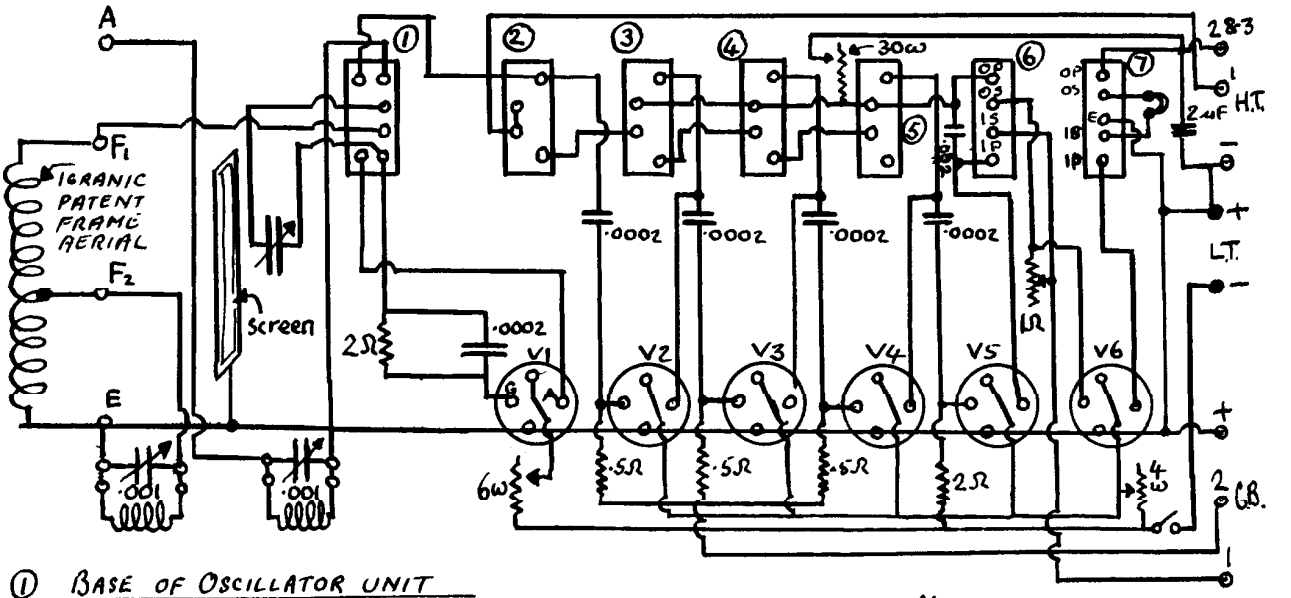

① BASE OF OSCILLATOR UNIT
②③④&⑤ BASES OF SELF STABILISING REACTANCE UNITS
⑥ BASE OF AUDIO FREQUENCY TRANSFORMER
⑦ BASE OF SPECIAL OUTPUT TRANSFORMER

NOTE: ω = OHMS
Ω = MEGOHMS

V1: FREQUENCY CHANGER (D.E.5). V2,3,4 I.F AMPLIFIERS (D.E.5B.)
V5: SECOND DETECTOR (D.E.5B) V6 A.F. AMPLIFIER (D.E.5)

EXCHANGE

SEARCHING Amplion Miniature 'Dragon' horn speaker with oak wood horn - (Dragonfly?). Will buy - or swap with 'brand new' standard size Dragon - or perhaps something else? It would be worth a lot to me. Also wanted: Brown Crystavox crystal-set amplifier-horn speaker. Bob Hawes, 63, Manor Rd., Tottenham, London N.17. Tel: 808-2838 (or 801 2111 wk).

Information required on SABA Freiburg - Automatic 6-3D....repair manual, handbook with set, remote lead or plug for remote lead. Alan Gates, 3B, St. Phillips Square, Battersea, London, SW8 3RU Tel: 01-720-5839

Wanted: Pre-war television sets. Especially looking for the type with vertical cathode ray tube. Ken Brooks, 91, Sea Mills Lane, Stoke Bishop, Bristol BS9 1DX Tel: 0272 685280.

Marconi V1 or V3 receiver wanted. Also wanted: 'works' for Ericsson crystal set No 0/1002.... and case for BTH crystal set type 'C' Double crystal model. Also: tuner for 'Sonus' 'unit' receiver. Valves: Osram DE3 and DE7, BTH B5, Ediswan AR 0.06. Alan Carter, Trellis Cottage, Shalford, Nr Guildford, Surrey. Tel: 0483-504213.

Required: Type 6 or 62 Indicator using VCR97 (I have the tube). This was part of the ex-R.A.F. WWII GEE NAVIGATOR (I have the rest of the navigator) ... or any other WWII Indicator. J.A.Williams, 11 Moreton End Lane, Harpenden, Herts. Tel: 05827 3054

DISPOSAL Marconi morse inker (undulator) as appears in the bottom right hand photo on the front cover of W.J.Baker's 'A History of the Marconi Company'. Also for disposal: Marconi/Osram transmitting valves type DET-2 and MR-4. Finally: Pye type 15A all-wave mains superhet c. 1946. Alan Carter, Trellis Cottage, Shalford, Nr. Guildford, Surrey, Tel: 0483-504213.

For disposal: A.M. coil Master oscillator range B 1000-6000kcs. Transmitter type T1083. A.M. wavemeter W69 700 - 4000 kcs. Two Brown 'A' type earpieces only 600 ohms. C.Heys, Elect. Eng. Dept., B.I.T., Deane Rd., Bolton, Lancs BL3 5AB Tel: 0204 - 28851 ext 213.

HARPENDEN November 1979

The B.V.W.S. 'Winter Wireless Swap' took place at Harpenden again this year on 25th November. As usual trading was very brisk and some very interesting 'happenings' occurred. Ian Higginbottom and David Read put on the most staggering exhibition of loudspeakers imaginable - infact I would doubt that a more varied and impressive range of early speakers has ever been assembled that could equal both the technical and the aesthetic variety seen here. It is always pleasing to meet other members on these occasions and overseas members particularly. Franz Driesens joined us from Holland and, from further afield, Bob Zelemack (member of AWA and the Southern California Antique Radio Society) was in much evidence as a buyer of those small items that can be taken as hand luggage. At this meeting members were introduced to the idea of B.V.W.S. 'Commercialism' by being charged the sum of £1 for the meeting. It is the intention that this sum be charged in future to help defray the costs of hiring the hall. Members who are unable to attend these meetings might gain some consolation from the fact that they should become self-financing. Some of the parts from the Brookman's Park Transmitter were on display at Harpenden - ranging from a magnificent wood and copper variometer to humble porcelain insulators. Members who have not yet purchased their £1 ticket for the 'Brookman's Park Draw' please do so before the end of January. The draw will take place at the A.G.M. ... further details in the next Bulletin. See editorial in this Bulletin.

WIRELESS IN IRELAND - PAST AND PRESENT

By D.K.McCrossan

Ireland has many historic links with the early days of wireless. The large Clifden (Galway) and Glace Bay (Nova Scotia) stations commenced experimental operations in 1906 and regular communication was established in 1908 shortly after Marconi's first attempt to span the Atlantic between Poldhu (Cornwall) and St. John's (Newfoundland) in 1901. The Clifden station was erected in a very wild and isolated situation overlooking the Atlantic. High power was used from a self contained installation and separate long wave receiving and transmitting aerials were used. The transmitting aerial was about 170 feet high and ran for over $\frac{3}{4}$ mile from the power house in a direction away from Glace Bay but the earth connections went to a lake in a direction towards Glace Bay. This set-up beamed the signals strongly towards Nova Scotia. The receiving aerial was identical in shape but extended horizontally for one mile. High D.C. voltage was used for transmitting from a battery of dynamos connected in series and used together with 6000 accumulator cells. A rotary spark gap was used to provide regular sparking at the transmitter and a Fleming oscillator valve was used for receiving. These Clifden and Glace Bay stations were the most powerful in existence apart from Marconi's station in Coltano (Italy). However, enough about telegraphy for the time being and now over to telephony.

The Irish state controlled service was inaugurated by Dr Douglas Hyde (later president of Ireland) on January 1st 1926. The first transmission came from 2RN located in a dark brick building in Little Denmark Street in the centre of Dublin on 390 metres with a power of 1kw. A year later, on 27th April 1927, the Cork station 2CK opened on 400 metres with 1kw and in 1928 the Dublin studios were transferred to the G.P.O. In June 1932 the Athlone (Centre of Ireland) transmitter opened temporarily for the World Eucharistic Congress on 413 metres with a power of 60 kw and a regular service began from there the following year. The Dublin station closed temporarily the same year, but resumed transmissions after four months in response to public demand. The following year, Athlone increased power to 100 kw. In 1940 all transmitters were synchronised on 531 metres but a new 2 kw station was installed in Dublin the following year. At the end of the war, in 1945, synchronisation ceased. In 1966, an Irish language network was set up on vhf and medium waves, and finally, in 1975, a new high-power (500 kw) station was installed under contract to N.E.T. of Japan. This transmitter, at Tullamore, brings Ireland's voice loud and clear into many parts of Europe on 529 metres.

It is noteworthy that the new ultra-modern studio complex on the outskirts of Dublin actually incorporates the dwelling house which was the family home of Annie Jameson, mother of Guglielmo Marconi. There are also a few other interesting facts about wireless in Ireland. Although regular broadcasting did not commence until 1926, it is claimed that the first radio 'broadcast' in the world occurred in Dublin on 25th April 1916 during the height of the Easter Rising. The 'broadcast' was prompted by fears that the British authorities would censor or suppress the new of the Rising, so the insurgents commandeered a $1\frac{1}{2}$ kw ship's transmitter at the School of Wireless Telegraphy close to the G.P.O. Continuous communiques on the progress of the Rising were broadcast in morse code for 18 hours from late afternoon on April 25th 1916. These communiques were apparently directed to any who might hear them for the purpose of having the latest news relayed to the outside world.... and in particular to the Irish-American communities in the U.S.A.

As I write these brief notes, a second light music service is making test transmissions on approximately 490 metres with a view to providing an alternative 'pop' programme to replace the many well-established and quite powerful 'pirate' stations operating openly over the past couple of years in Dublin and other large centres. This new service was in fact inaugurated on 31st May 1979 and is called 'RTE Radio 2' 2'. It is broadcast simultaneously on 490 metres, 240 metres medium waves and on five vhf transmissions from 6.30 a.m. to 2.00 a.m. daily.

Draw tickets for Brookman's Park transmitter parts available from Bulletin Editor at £1 each. Only one each, remember. Tickets must be bought before January 30, 1980

A GERMAN PUZZLE

Several suggestions have been made about the circuit which appeared in David Read's article in the last issue. Only two BVWS members were prepared to put pen to paper on the matter. Desmond Thackeray's suggestions were peppered with amuzing thoughts and several interesting questions. He thought it was a radio-frequency meter and a possible antecedant of the 'Q' meter we know today. Philip Beckley came to a clear decision and, while I would like to publish both replies, space is short and Philip's has been chosen for being the more instructive of the two. Editor

.....

AN ANSWER TO A GERMAN PUZZLE

By Philip Beckley

The device shown in the last Bulletin appears to be a wavemeter and crystal calibrator.

The right hand valve is a detector/mixer so that as the Variable Frequency Oscillator (V.F.O., left hand valve) is varied in frequency 'pips' are produced as the harmonics of the crystal oscillator (centre valve) are passed.

The crystal oscillator has a frequency close to 1 MHz (301.1 metres would probably trim to 1 MHz exact on setting up). so that harmonics at 2, 3, 4, 5 etc MHz would provide calibration markers for the V.F.O. Since 1 MHz is chosen for the fundamental, the V.F.O. is likely to cover the range around 4-30 MHz (examine coil and guess!). Possibly alternative crystals could be plugged in to give, say, 100kHz markers if the V.F.O. anode tank circuit had components plugged in for lower frequencies.

Signals coming into the left hand valve anode circuit via the aerial could be heterodyned and verified as to frequency by listening in the phones.

Also if non-energised resonant circuits are placed in light coupling to the V.F.O. it would be able to act as a wavemeter by the 'double click' method if this noise couples through to the detector. With this type of wavemeter it is usual to employ a very short aerial (e.g. 1ft) so as to avoid sensibly loading the V.F.O. tank circuit. In this mode, transmitters being adjusted in the workshop can be set up when operated close to the wavemeter. Such an instrument would be found in a service shop for military or civil mobile (e.g. aircraft) transmitter sets and the like or even in the control room of a fixed station.

So we now wait for David Read to report back after putting the instrument properly through its paces..... watch this space. Ed.

LETTER TO THE EDITOR

Dear Sir, Until very recently I had supposed that the first published account of a two-crystal wireless detector (a p-n junction perhaps in the language of 1979) was Pickard's description of his famous Perikon detector (zincite & chalcopyrite) in the patent numbered 912,716 that he applied for in the U.S.A. Oct. 15 1908. But no! On April 27 of that year Louis W. Austin submitted an article to the Bulletin of the Bureau of Standards in which he describes measurements on a number of contact rectifiers, including silicon with a metal point, substantially as patented by Pickard the previous year. Most of his silicon samples showed what we would interpret as n-doping, but in a single case he observed rectification in the reverse direction. He then made a contact between two pieces with "opposite rectifying properties" and produced a "rectifier of remarkable sensitiveness". Sad to say, he does not report whether he used it to detect genuine wireless signals. Quite apart from this silicon p-n detector, he describes a rectifying "contact formed by melting the end of a No.20 aluminium wire into a block of tellurium". So here we have a very early alloyed junction rectifier (could it be the first of its kind?)... a model for the alloyed junctions of fifty years later. The ohmic contact to the tellurium was made by inserting a piece of white hot platinum wire. After this bout of inventiveness, Austin seems to have contributed little further of importance to the subject. Were his two-crystal silicon detectors or his Te-Al detectors used subsequently? I can find very little evidence of this, and would welcome information from readers - all letters will be replied to and postage refunded, of course. Desmond Thackeray.