ISSN 0955-9345

BULLETIN OF THE BRITISH

VINTAGE WIRELESS

SOCIETY

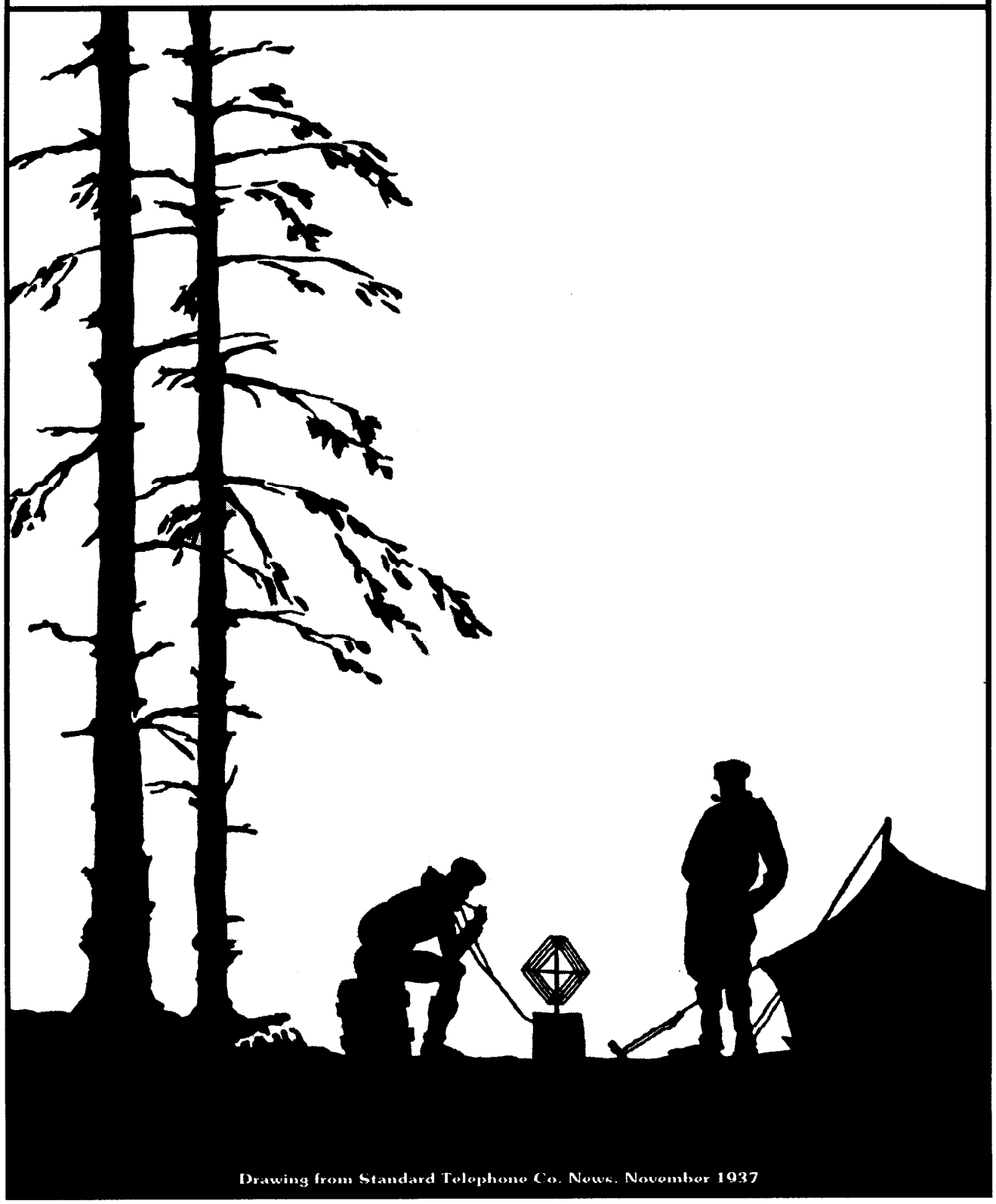

Drawing from Standard Telephone Co. News. November 1937

BULLETIN OF THE BRITISH VINTAGE WIRELESS SOCIETY Vol. 18 no. 5

BULLETIN OF THE BRITISH VINTAGE WIRELESS SOCIETY

Editorial and advertisement enquiries should be made to the Editor, **Robert Hawes**, 63 Manor Road, Tottenham, London, N17 OJH. Tel: (081) 808 2838.

Editorial Assistant: Pat Leggatt.

Layout and design: Robert Hawes
Cover drawing: Norman Jackson

Information Exchange: A Register of Members' Interests

Members are invited to take part in this scheme, which is designed to provide a sort of clearing-house for information of all kinds between members. You may want to contact other members with similar interests to your own, or to acquire data, historical information, advice on restoration etc. Or perhaps you are willing to share your knowledge with other enthusiasts or to exchange visits? If so, you are invited to send details of your interests and of the help you are willing to offer to others, to the Registrar: (SAE please)

DAVE ADAMS
69 SILVER LANE,
WEST WICKHAM, KENT BR4 0RX.
TEL: 081-776 1531

Contents: Bulletin of the British Vintage Wireless Society Volume 18 no. 5

VINTAGE WIRELESS MUSEUM

The Vintage Wireless Museum, headquarters address for the British Vintage Wireless Society is at 23 Rosendale Road, West Dulwich, London SE21 8DS. Telephone: (081) 670 3667. The Curator is Gerald Wells, whom visitors should telephone before visiting the museum.

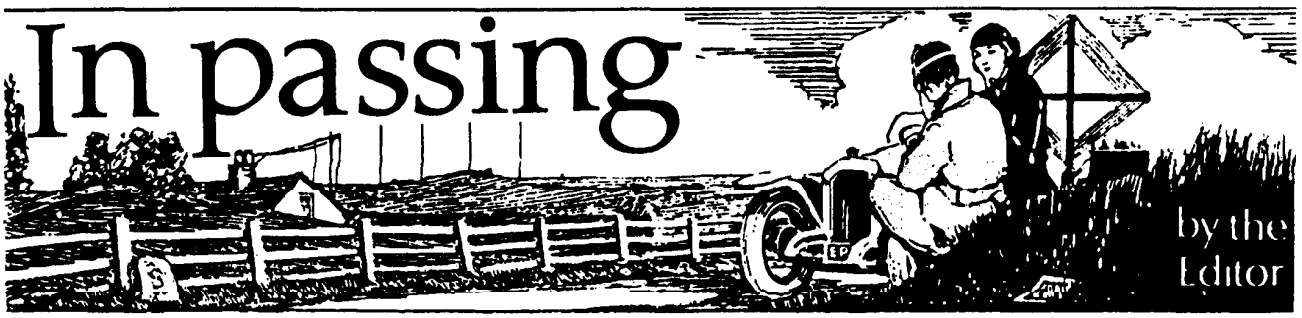

Correspondence for the Society's Bulletin should be addressed to The Editor, Robert Hawes, 63 Manor Road, Tottenham, London, N17 0JH. Telephone: (081) 808 2838.

Plans for 1994

The Society will have at least a dozen meetings up and down the country in 1994- including regional ones, giving the opportunity for the majority of members to take part in our activities.

Dates for our main meetings at Harpenden in 1994 have now been fixed. They are: 27th March, 5th June, 25th September and 4th December. Dates fixed for our Regional meetings at Southborough are 29th May and 16th October. Dates for our Regional meetings at Portishead are confirmed as 9th January, 8th May and 14th September. Dates for our meetings at Wootton Bassett will be announced soon.

Our meetings are, of course, open only to fully-paid-up members. We should like to remind you that subscriptions will be due on 1st January 1994 irrespective of individual joining dates. Despite increased postal and other costs, it has been decided not to increase subscriptions but you are requested to pay up as soon as possible to help us with our bills- and also to help our Treasurer Alan Carter whose workload becomes immense if everybody waits to pay until the last minute.

Wireless for the Blind

The article in our last issue concerning the recent discovery of a complete receiver kit originally issued by the British Wireless for the Blind in 1929 attracted some interest- not least from the Fund itself, for it is the earliest example of such a set they have seen.

Still going strong after almost 65 years of service, the Fund is trying to start a small museum at its headquarters and it is hoped that the newly-found set will have a place there.

The Fund does not simply provide receivers for blind people, but also a complete service which in 1929 included erecting an aerial, ensuring a regular supply of HT batteries and arranging for accumulator-charging. Nowadays, they still supply free sets and batteries and undertake to keep sets going, so volunteer engineers are always required.

Their longest-serving volunteer, mid-octogenarion Ernest Weston, who with his wife Mabs has been helping for 62 years, has written to us to say he has taped our article for circulation to blind listeners. He recalls that the first radios he installed were crystal-sets and tells how, in pre-transistor days, he had to put up aerials in dark and spidery lofts for clients who also needed him to call once a week to have accumulators recharged. In cases where a whole family wanted to listen-in and a set without a loudspeaker was supplied (these were expensive in the Twenties) he used to tackle the problem by showing them how to fit the earphones into a half-sphereical washing-up bowl which provided some acoustical amplification.

Anyone who would like to help in the work of the Fund, by making donations or offering their services, should contact Mrs. M. Grainger at the Fund, Gabriel House, 34 New Road, Chatham, Kent ME4 4QR (Tel: 0634 832501). Volunteer engineers must be able to provide a service to professional standard and be properly equipped.

Radio Night

There's more news of the BBC "Radio Night" at Christmas which will present about seven hours of documentary and specially-filmed material about the history and development of wireless technology and broadcasting, viewed from many perspectives.

It is understood that the programme, produced by the "Arena" arts team, beginning at about 5pm and continuing until midnight, will be "Simulcast" so that it can be seen on BBC 2 Television and heard on Radio 4 simultaneously on Saturday 18th December.

The filmed material will include demonstrations of original and replica equipment from the GEC-Marconi Research at Chelmsford, including a practical re-enactment of the 1895 experiments Marconi did at the age of 20 in the garden of his parents' Italian home, using a spark transmitter and coherer receiver. The film team also scaled one of the aerials at Daventry to secure some impressive pictures. In addition, the programme will include some rare radio and film archive material, illustrations from contemporary magazines and documents and a selection of sets chosen to typify each period. Seven films have been made to illustrate the programme theme "The Seven Ages of Radio", using Shakespeare's "All the World's a Stage" soliloquy as a metaphor and structuring device to link the complex elements of the material.

Sir Ian McKellen will narrate the links, Lord Asa Briggs will outline the history of broadcasting and Robert Hawes will describe the evolution and the social and design history of the domestic receiver. The period covered is from the birth of radio just before the turn of the

Continued on next page >

In passing news, views and events

> Continued from previous page

century to a prophesy of future listening possibilities.

Conference

A joint Conference on "The History of Thermionic Devices" is to be held at the Science Museum Annex, Blythe House, Blyth Road, Hammersmith, London on 23rd April 1994, sponsored by the Newcomen Society. the Science Museum and the Institution of Electrical Engineers. The conference fee of £30 will include a copy of the Proceedings, comprising seven talks and a special exhibition arranged by the Museum. Further details can be had from the Conference Chairman, Keith Thrower, Old Cedar, 12 Wychcotes, Caversham, Reading RG4 7DA (Tel: 0734 74813).

Clandestine Radios

Pat Hawker, the well-known writer on wireless technology and other subjects, who is a valued contributor to "Vintage Wireless" is to give a lecture on "Clandestine Radio in World War II" on Tuesday 18th January 1994 at the Institution of Electrical Engineers, Savoy Place, London WC2R 0BL.

The talk will describe how, when European countries fell under German occupation there arose an urgent need to establish clandestine radio communications with allied Intelligence networks and Resistance groups, leading to the development of simple but reliable "suitcase" and "pocket" tranmitters and receivers and increasingly complex Signal Plans to counter German Radio Defence (Funkabwehr). The lecturer, who was himself engaged in such work in the war, will describe operational problems and the equipment of MI6, SIS, SOE, the London Poles and Czechs, equipment secretly built in occupied Denmark and Holland, and Abwehr sets used against the Allies.

Details can be obtained from the IEE.

Exhibition extended

The exhibition "Radio Times- from Catswhisker to Walkman" at the Strangers' Hall Museum, Charing Cross, Norwich, has been extended until 5th February 1994. The 80 radios on show are part of the collection of Harold Page, a BVWS member whose family have been involved in the radio industry since 1921.

Geoffrey Munton

We are sorry to hear of the death of Geoffrey Munton of Digby in Lincolnshire, a member of long standing, who despite ill-health was keenly interested in all kinds of technology from old cars to gramophones- and especially wireless-sets. He was not able to get to meetings but was a kind and cheerful host to friends and visitors who will greatly miss him.

Geoffrey Munton with his radios and his "Nipper" Dog.

Museum News

Enrico Tedeschi, an Italian member of our Society who is well known to British members through his frequent visits here, recently retired and has settled in Hove in Sussex, packing up his interesting private museum in Rome and bringing it to his new home. He is anxious to take as full a part as he can in the Society and hopes to find a permanent home for his collection on the South Coast. We welcome him and look forward to the establishment of his museum as another resource of both interest and knowledge to add to the many private collections which our members already make available to each other.

Now that public museums are so starved of funds and are consequently unable to provide the resources that used to be available to researchers, it is important that we should be willing to share the fruits of our discoveries and knowledge. One way that members can do this is to register with the Society's Information Exchange which keeps records of members' special interests. This is operated in a responsible way to avoid members who offer help from being exploited by people whose interest is merely self-seeking or is entirely commercial, so that contacts are not made without the consent of the parties concerned. Anyone wishing to take part should contact our Information Officer Dave Adams at 69 Silver Lane, West Wickham, Kent BR4 0RX (Tel: 981 776 1531).

IEE Faraday Lecture

The 1993-4 Faraday Lecture "The Magic of Communications" illustrated with experiments and video recordings is now on tour, currently in Ireland and shortly to visit Wales and Scotland. In the New Year the tour moves to various parts of England, to finish at the end of March.

The Lecture outlines the history and development of communications, showing how the merging of telephone and computing technologies plus the rapidly developing provision of personal, mobile video and audio links is making distances unimportant. It finally poses the question: "What impact will all this have" and "Will it mean we shall no longer need to travel to the office, factory, theatre and shops?

Free information and tickets can be obtained by sending an SAE to Bridget Murrell at the IEE, Faraday House, Six Hills Way, Stevenage, Herts SG1 2AY. Supporting teaching material relevant for Science and Technology curricula KS3?4 and Physics post-16 is available.

The first Transistor radio

by Enrico Tedeschi

The first transistor radio was put on sale in December 1954. That is nearly 40 years ago. It is by now a worthy subject for the vintage wireless collector.

Despite what one might think, the first transistor radio in the world was an American product not a Japanese one (which appeared only in August 1955 as a SONY TR-55, when Sony still called itself Tokyo Tsushin Kogyo Co. Ltd.). It was made by a firm called Regency and it was known as model TR-1 (and what other name could it possibly have had?). It was a super-heterodine with four transistors and a loudspeaker output of only 10mw.

The Regency TR-1 was made by I.D.E.A. a small and unknown firm of Indianapolis, with transistors made and supplied by Texas Instruments, one of the first companies to jump on the semiconductor bandwagon after its invention by Shockley, Brattain and Bardeen in the Bell Laboratories in 1948.

Texas Instruments, having obtained a licence from Bell Laboratories, started to produce transistors by the million and at the end of 1953, lacking commercial expertise in the consumer-goods market, started to look for somebody to make and distribute a transistor set which had been designed and tested by its engineers, under the guidance of its vice-president Patrick E. Haggerty.

After having received negative answers from nearly all the large electronics firms, Texas finally contacted I.D.E.A. whose president Ed Tudor thought that it was about time that a portable and *pocketable* transistor radio was put on the market. At the time cold war was still on and the possibility that a radio set in one's pocket could

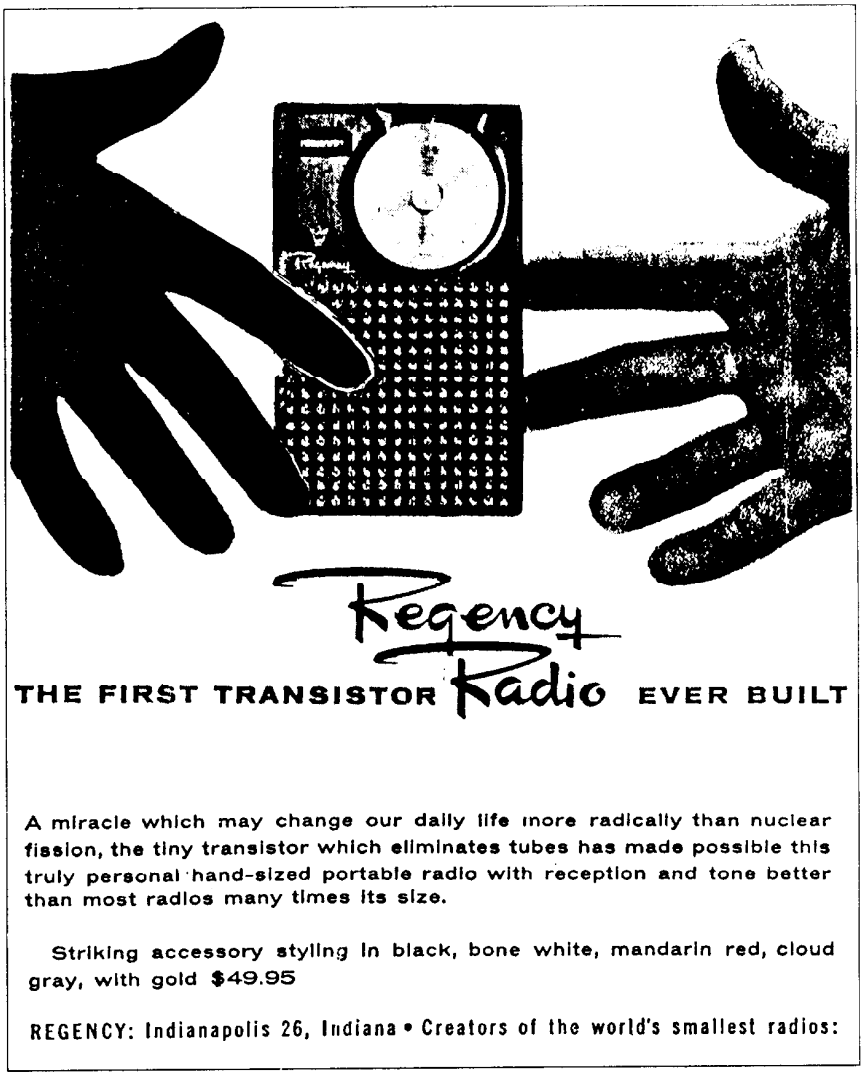

have meant the difference between life and death in case of a nuclear conflict with the Soviet Union, made Tudor think that he could sell at least 20 million sets in a three year period.

The I.D.E.A. engineers redesigned the Texas receiver making it smaller and also reducing the number of transistors to four (plus one diode as a detector). This might seem ridiculous to-day, now that the price of a transistor is lower than that of a resistor, but at the time the cost of active components was comparatively high. They reduced in size other vital components such as the variable condenser and the (not so) loud-speaker.

On October the 18th 1954, just in time for the Christmas season, I.D.E.A. announced that they had put the small beast in production. Its size being 125x75x32mm., its weight only 330g., it was half the size of a comparable valve set. And it was a true pocketable radio capable of driving a real loudspeaker and not the flimsy earphone of previous "shirt pocket radios".

As an accessory you could also buy a leather carrying case and an earphone for private listening. At $49.95 plus batteries and accessories it was able to fit anybody's shirt pocket but not everybody's budget! And because at the time I was short of pocket money I sent for just the information leaflet (which you can see reproduced here).

The battery was a 22.5 volt hearing aid type and, thanks to the low

Continued on next page >

Recent History

> *Continued from previous page*

current consumption, it gave from 20 to 30 hours of listening. a respectable figure which was much better than that of a comparable valve set of the time. Even so it was not received with great enthusiasm by the consumer magazines, its main faults being the lack of loudness, the distorted sound and the background hiss. All in all the magazines exhorted their readers to wait for technology to improve the product. Clearly the hunt for miniaturization and low consumption had taken their toll.

After about a year roughly 100,000 had been sold; a good figure for such a revolutionary product so different from what at that time was considered normal, but nevertheless far away from the projected mass invasion of the market which was the intention of I.D.E.A.and Texas. The Regency TR-1 was clearly a commercial flop but for Texas it was a technological triumph which showed the world and especially the other firms in the trade how advanced their technology was.

It seemed also to give promise of a realisation of the futuristic and romantic dream of those times, that the new marvel of semi-conductors might free society from the drudgery and toil of mass-production.

Has that dream been even partially fulfilled? Or has the quality of our life been lowered by all the technological wonders we see around us?

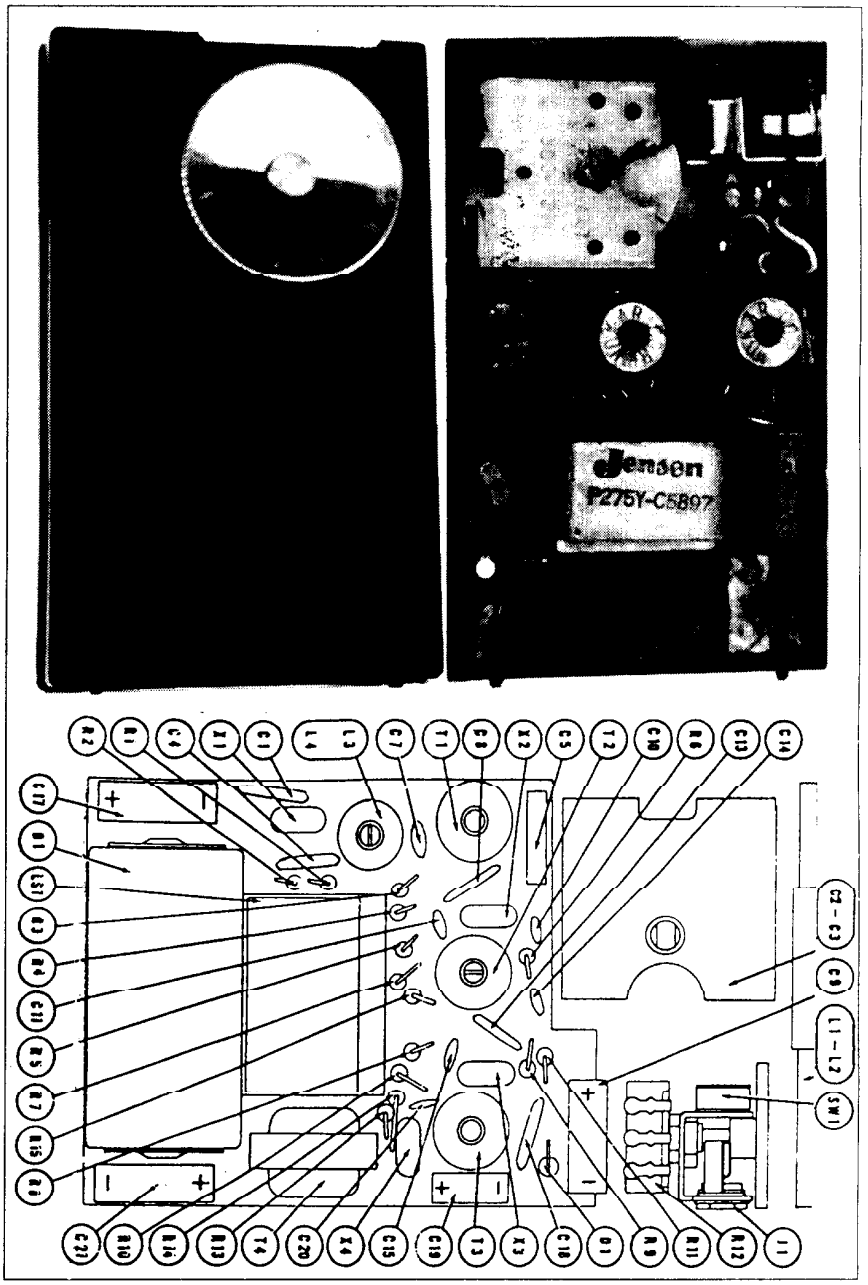

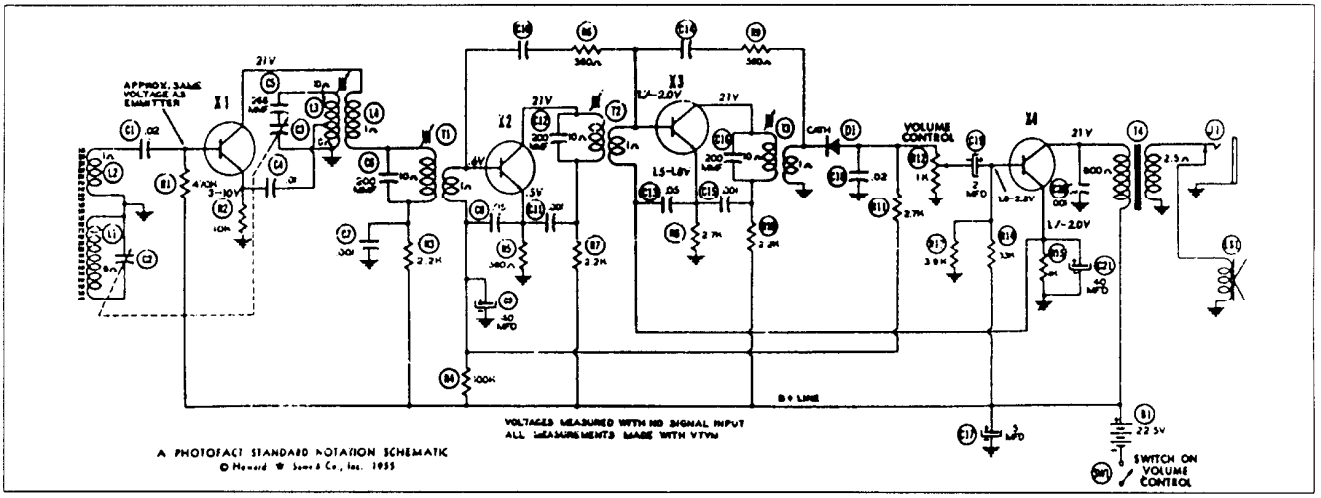

The Wireless Magazine March, 1925

The Evolution of the Crystal Set

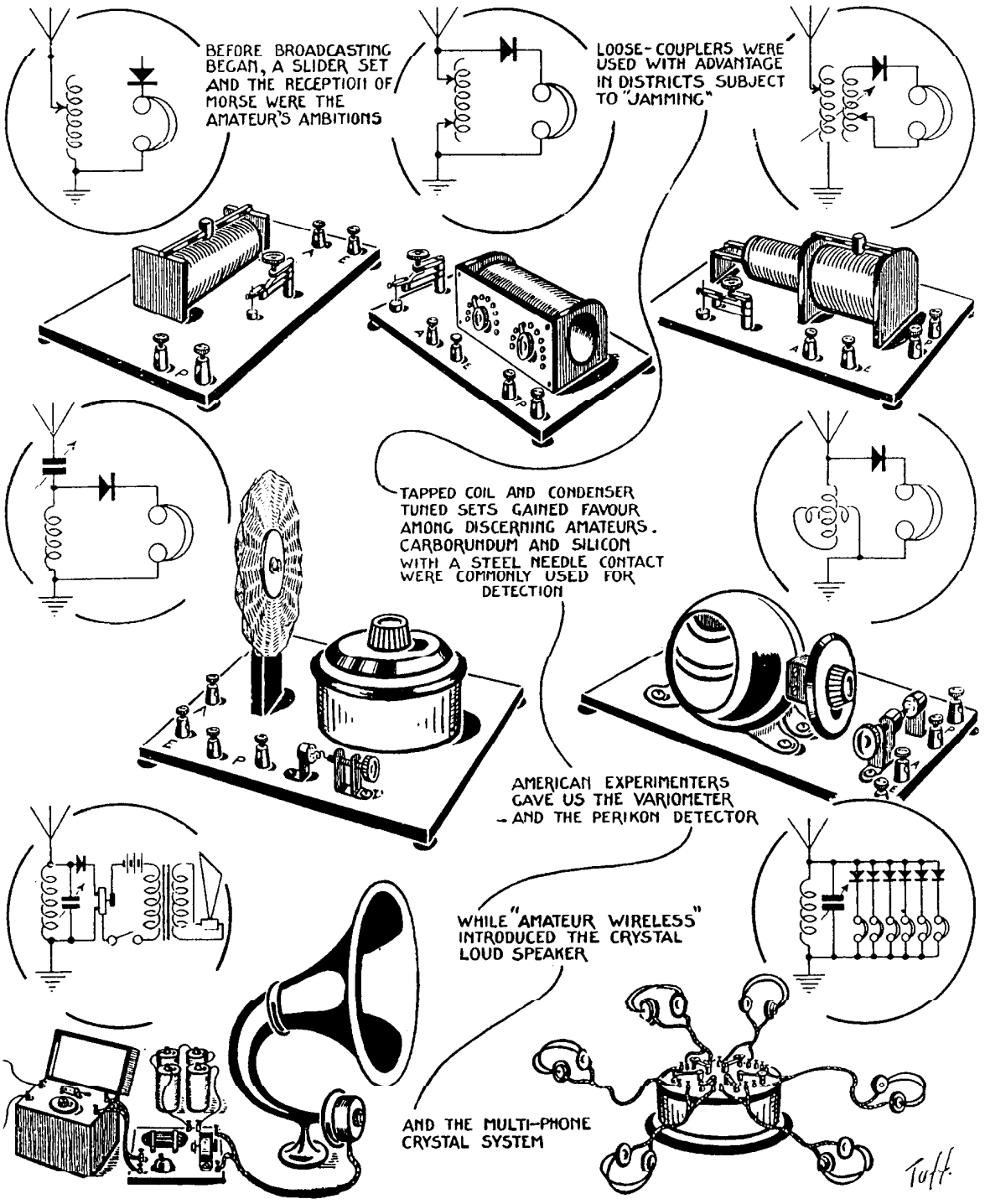

Reviews

Book review

by Pat Leggatt

"Hacker Radio", by Geoffrey Dixon-Nuttall and Gordon Bussey. Published by GDN Publications. Price (to BVWS members only) £2.75 + 45p post & packing

Here is a publication which can be highly recommended, telling the story of Hacker and Dynatron, – names synonymous in their day with excellent quality. It is a 28-page booklet with 22 pages recounting the origins, rise and eventual decline of the companies; followed by 6 pages of comprehensive lists of the products, and a bibliography. It is lavishly illustrated throughout with 25 photographs.

The Hacker brothers, Ron and Arthur, were self-taught with no professional training; but avid reading made them experts in the radio field. They started their own manufacturing company in 1927 in one room above their father's grocery shop in Maidenhead under his name, H.Hacker, since the brothers were still minors aged 17 and 19 at the time. They adopted 'Dynatron' as the trade name for their products, changing the company name to Dynatron Radio in 1936.

From the start their philosophy was to design radios of the highest quality, incorporating all the latest technical advances and aimed fairly and squarely at the luxury end of the market: their 1934 'Ether Emperor' radiogram contained 17 valves and sold for a hefty 130 guineas, and in 1938 this was combined with a Baird TV with a total of no less then 35 valves. They applied similarly high standards to factory testing and – rather hurtfully – announced that "No girls are used in any operation"!

The authors continue the Dynatron success story up to the war years, when the firm made notable contributions to production of RAF guidance systems. But after the war Dynatron could never quite recover its former glory and was taken over by Ekco in 1954; later successive mergers resulted in Dynatron being absorbed by Roberts Radio in 1981.

The brothers revived Hacker Radio in 1959 and in following years earned a well-deserved reputation for high-quality transistor receivers. But the increasingly competitive market, in which Roberts Radio alone of British manufacturers have managed to survive, forced Hacker to the wall after 1977.

The authors' account of this story is admirably told, with sufficient background to set the scene along the way but with most reference information such as model numbers and associated details confined to separate lists appended at the end. I can certainly confirm that their intentions have been realised when they say in conclusion about the Hacker brothers "We hope this little book will provide a memorial to all their skills, hard work and enthusiasm".

Pat Leggatt

Book review

"Old Radio Sets" by Jonathan Hill, 32 pages, 52 photographs, price £2.50, published by Shire Publications, Cromwell House, Church Street, Princes Risborough, Bucks, HP27 9AJ.

This little bargain booklet from Jonathan Hill is a sort of miniature edition of his *"Radio Radio"* (1986)* which is popular among collectors for its generous compendium of 1,000 receiver photographs.

The title "Old Radio Sets" (perhaps imposed by the publishers to allow it to fit in with their generic title for a large and varied selection of collectors' books) is something of a misnomer since the text is as much about the history of wireless technology and broadcasting as "old radio sets". However, that's a bonus, for it provides much in the way of interesting information interspersed between good black-and-white illustrations. Most of the material is already available in the literature - but one would hardly expect a 32-page booklet at a couple of pounds to be a resource book; it is an excellent taster for the initiate.

RH

*Recently reprinted with a new index and improved reproduction and obtainable price £25 from the author at 2-4 Brook Street, Bampton, Devon, EX16 9LY.

New Magazine

Issue No.1. "Antique Radio News", 48 pages A4. Six issues 32,00 Lire from Mose Edizioni, Via Bosco, 4-31010 Maser (TV) Italy. (Telephone/Fax 423-529049).

Published in both Italian and English language versions by the Italian collectors Riccardo and Eunice Kron, number-one issue *"Antique Radio News"* is a beautifully-produced magazine in vintage colour and even printed on simulated aged and yellowing paper. It is a considerable achievement from the point of view of production but as it becomes established one hopes that the quality of the editorial material will be improved.

Photographic features include a "gallery" of American consoles: a wonderfully-complete British Tingey "Unit" system with some not strictly relevant but interesting notes on 1920's Italian developments; a collection of vintage components and some attractive vintage advertisements.

There is also an account of the death of Marconi in 1937, and a translation in serial form of a 1923 French article on the beginnings of wireless telephony. A feature on Majorana, which describes him as "the father of wireless telephony and the inventor of the Ionic valve", interestingly details his experiments of c1909 with a system using powerful microphones to modulate an arc transmitter, but it would have benefited from placing within the context of general wireless history.

Altogether a tempting first issue, despite some idiosyncratic translation. We look forward to the next issue, promising features on Baird's Televisor and on valves, plus free advertisements to subscribers.

Stokes' books

For the first time ever, all three titles of the well known books on Vintage Radio by John W. Stokes are back in print at the same time. So, if you missed out in the past, or have not yet discovered the wealth of information contained in each of these three volumes, now is your chance. They are: *"70 Years of Radio Tubes and Valves"* (249 pages soft cover); *"The Golden Age of Radio in the Home"* (162 pages, hard cover); *"More Golden Age of Radio"* (203 pages, hard cover).

Available from: Antique Electronic Supply, 6221 S. Maple Ave., P.O. Box 27468 Tempe, Arizona 85283 USA. Phone (602) 820-5411, Fax (602) 820-4643.

Murphy book

"A First Class Job! – Frank Murphy, radio pioneer" is again available. This fascinating story of the remarkable radio manufacturer of the 1930s who was a pioneer in both radio and furniture design and whose ideas on advertising, retailing, and industrial democracy were far ahead of his time can be obtained from the author and publisher: JOAN LONG, Weybourne Road, Sheringham, Norfolk, NR26 8HF. Price £7.50 including postage and packing. Also available at BVWS meetings.

Reviews

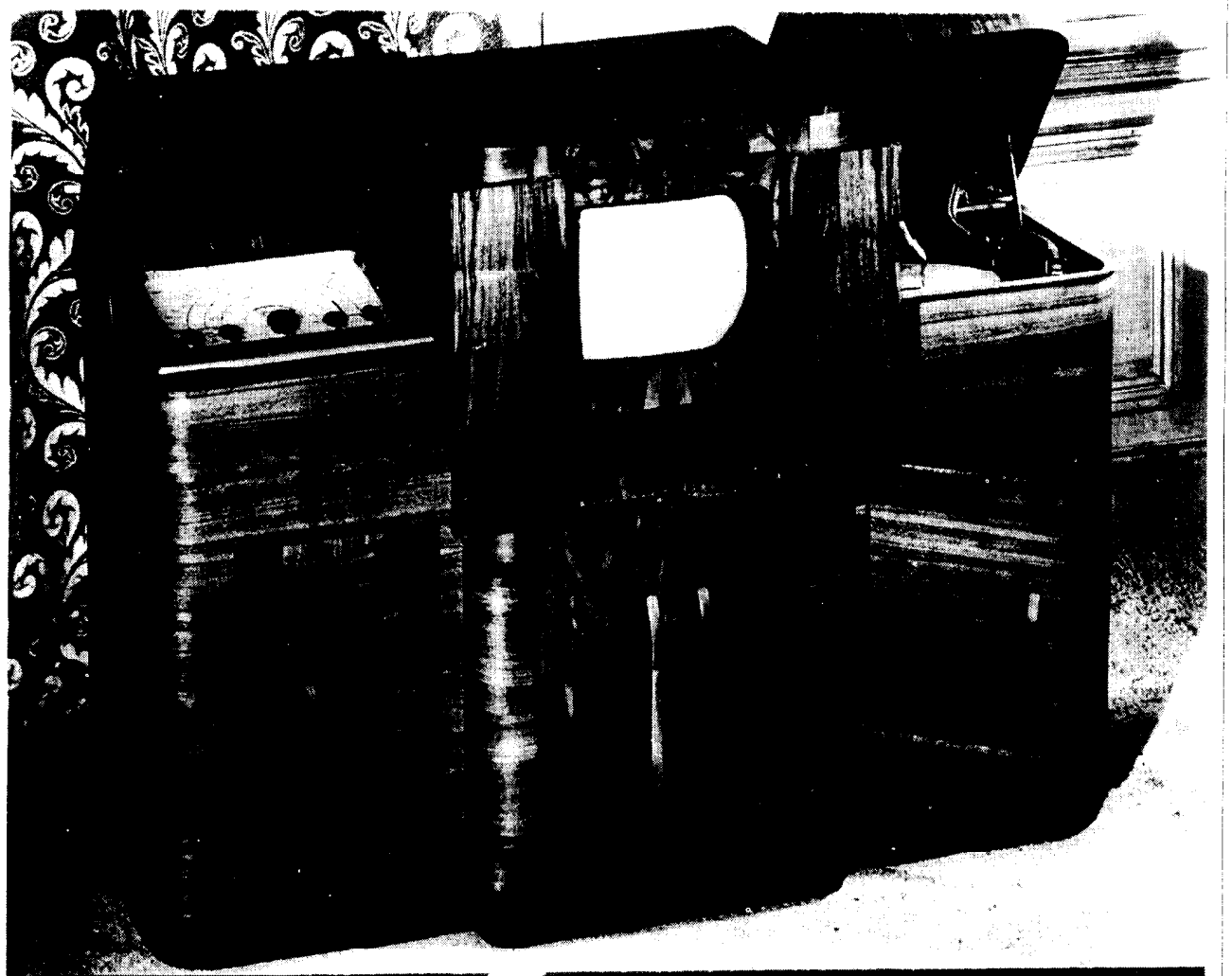

Photographs from the book "Hacker Radio" reviewed on adjoining page: (top) Dynatron "Ether Sovereign" television/gramophone of 1948; (bottom) Radiolympia stand 1932.

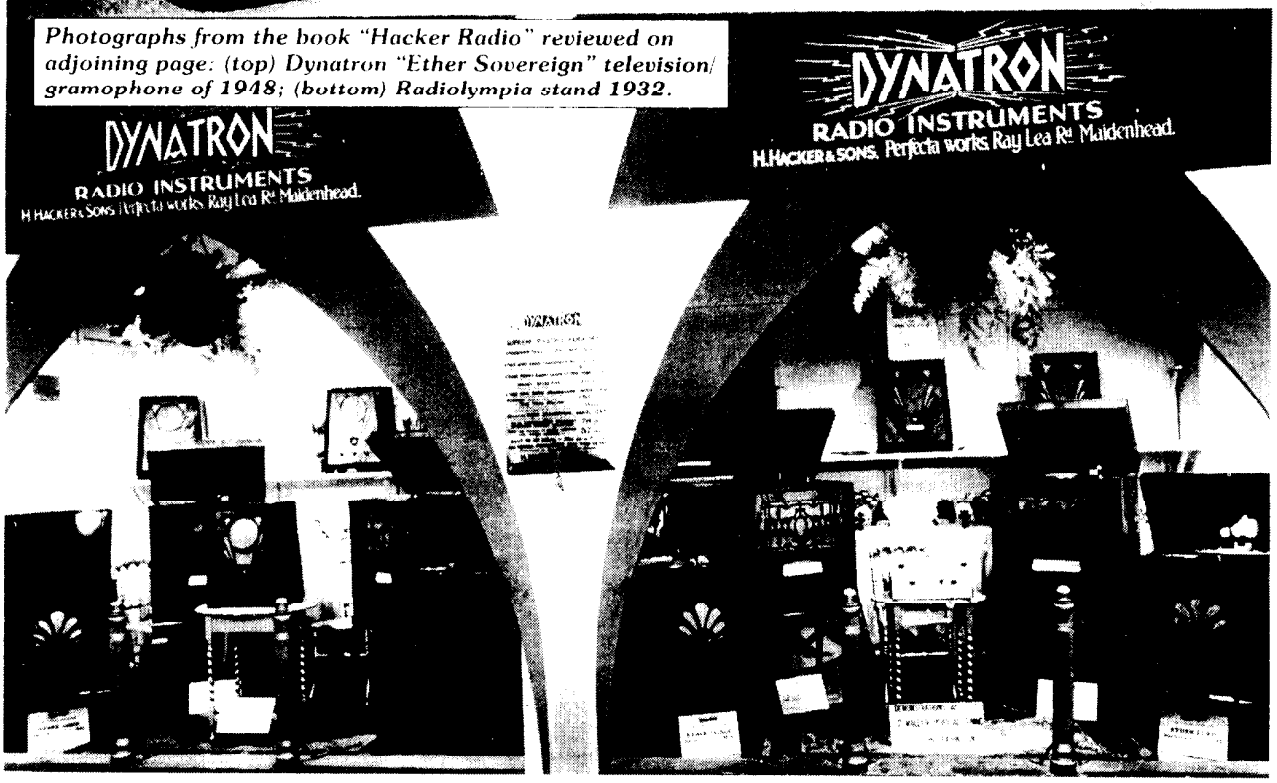

History

The Way It Was

Some statistics from Dave Adams

RADIO TRADE REVIEW October 1933:
"The number of wired houses in Great Britain has increased by 13 per cent. There are 3,835,387 homes taking A.C. supply, 1,046,784 on D.C. and 6,315,449 not on the mains. Last year 38.5 were on mains: today the percentage is 43.6."

WIRELESS WORLD 15 Dec 1933
"It is stated that three-quarters of the 664 undertakings holding distribution powers declare the standard power (sic) of 230 volts and 100 supply on the D.C. system. There are some 270 undertakings supplying at three or more voltages between 100 and 480 (!), and in forty-three instances five or more voltage systems are employed." (The comments in brackets are mine.)

WIRELESS WORLD 24 Sept 1937
"During the past year the Philco concern has carried out a novel house-to-house canvass to obtain information from people concerning their wireless sets. Over 5,000 families were visited in seventeen different towns and cities.

Of those questioned who possessed receivers, 14.5 per cent used home made sets. The remaining receivers were produced by 213 different manufacturers, although 80 per cent of them were made by twenty manufacturers.

Nearly 5 per cent of the people did not know what make of set they used. Sixty per cent of the sets were more than two years old. Seventy-five per cent of the people visited had never bought a new valve; does this prove either the great reliability of valves or the atrocious quality of reproduction which satisfies some people.

Probably the most interesting thing of all was that 42 per cent of the people voted for quality of reproduction as being the most important feature of a set, while only 5 per cent voted for long-range and 7 per cent for high selectivity."

WIRELESS WORLD 17 Sept 1937
"According to the United States Department of Commerce, there are 30,000,000 receivers in use in America. Great Britain comes second with 10,000,000, while Germany is reported to have 8,200,000. There is then a tremendous gap in the figures, the next country being France with 2,626,000 sets in use. All other countries are well below the million mark."

WIRELESS WORLD 1 OCT 1937
"Efforts have been made on several occasions to arrive at an estimate of the average number of years wireless receivers are used before their owners replace them by new ones. Recently we have seen one such estimate compiled from a large proportion of the readership of 'John Bull'. The census shows that some 80 per cent of the set in use by readers of that paper are from one to four years, leaving 20 per cent of sets still in use which are in excess of four years of age. The figures also show that more than 50 per cent of sets are changed within two years."

WIRELESS WORLD 17 March 1938
"For every thousand inhabitants in Britain there are 160 set owners. In Germany there are 120 sets per thousand inhabitants. These figures place saturation point still a long way off since the maximum number of sets for each thousand inhabitants is estimated at 300."

WIRELESS & ELECTRICAL TRADER 16 Dec 1944
"Radio War Production Statistics - In the section on civilian consumption, comparisons between the production in 1935 and in 1943 are given. It is stated that in 1935 the number of civilian wireless receivers was 1,900,000; in 1943 it was 50,000. On the other hand, the consumption of wireless valves for replacement (which presumably includes American imported types) shows a much smaller drop. The figure is 5,000,000 for 1935 and 3,500,000 for 1943. The supplies of gramophone records were 20,000,000 in 1935 and 11,000,000 in 1943."

If anyone can supply similar figures (with references, please) for any intervening years, I would be grateful. We might, in due course, be able to analyse and to plot developments.

Not Radio –

But it was *wireless* telegraphy

by Eric Westman

Adapted from 1902 "Household Words"

Telegraphy of a sort is as old as the hills.

The Greeks, for instance, had a quaint method of communicating over considerable distances by the aid of a pair of glorified quart pots. It was employed chiefly between military camps - but they had to be in view of each other even though a great distance apart. Each camp was provided with an earthen ware vessel of precisely similar capacity, fitted with a waste tap of precisely similar gauge. Each was filled to the brim with water, and on the water floated a cork supporting a vertical stick. This was marked like a foot rule, except that in place of figures it bore brief military messages such as "Assault the enemy at once", I am retreating", "Send me reinforcements". etc.

When Captain Hector wished to communicate with Captain Aeneas, he lit a torch, to which Aeneas responded in like fashion. Recognising that his CQ had been answered, Hector "doused his glim" and opened his water tap. Aeneas, seeing the light extinguished, immediately opened his tap too. The falling water level made the corks in each camp descend at an equal rate and the upright stick of messages to sink, line by line, through the neck of each vessel. When the message Hector wished to telegraph came level with the neck of his jar, he turned off his tap and immediately lit his torch. Far-off Aeneas, seeing the re-kindled light, turned off his tap too, and read as his message the line that was about to disappear into the neck of his jar.

The name of the inventor of this system of w/t has not come down to us, but he was undoubtedly the Marconi of his time!

The AVO Valve Tester

Type 160: Principles of Operation

by Pat Leggatt, (with valuable advice from Denis Tabor)

This familiar valve tester is the one made in metal suitcase form with the test valve sockets in the lid. The instrument is designed to check most receiving valves and some small transmitting valves. The test ranges are as follows:

Anode voltage	20 - 400 V
Anode current	0 - 100mA
Screen voltage	20 - 300V
Negative grid voltage	0 - 40V
Heater voltage	0.625 - 117V
Mutual conductance	0 - 20mA/V

The straightforward approach to the design of such an instrument would be to provide well regulated DC power supplies for the anode, screen and control grid voltages; and some sort of bridge circuit for measurement of mutual conductance. This approach would be perfectly feasible, but when one gets down to details it starts to look a bit daunting.

An regulated supply for the anode voltage, variable from 20V to 400V with load varying between zero and 100mA, is quite an item: the regulator valve for example would have to absorb up to 380V at 100mA, a dissipation of 38 watts.

In independent regulated supply for the screen grid voltage is another significant item, although with somewhat less demanding voltage and current requirements.

Another independent regulated supply for control grid voltage would be needed, albeit an easier design task since little or no grid current need be catered for.

All three supplies would need to be carefully smoothed and accurately metered; and altogether the valve tester would be large, heavy and very expensive. So the designers of virtually all good quality valve testers, including this one, adopted a quite different approach with no necessity for any regulated DC supplies and instead devising an ingenious method of accurate valve testing using only AC supplies.

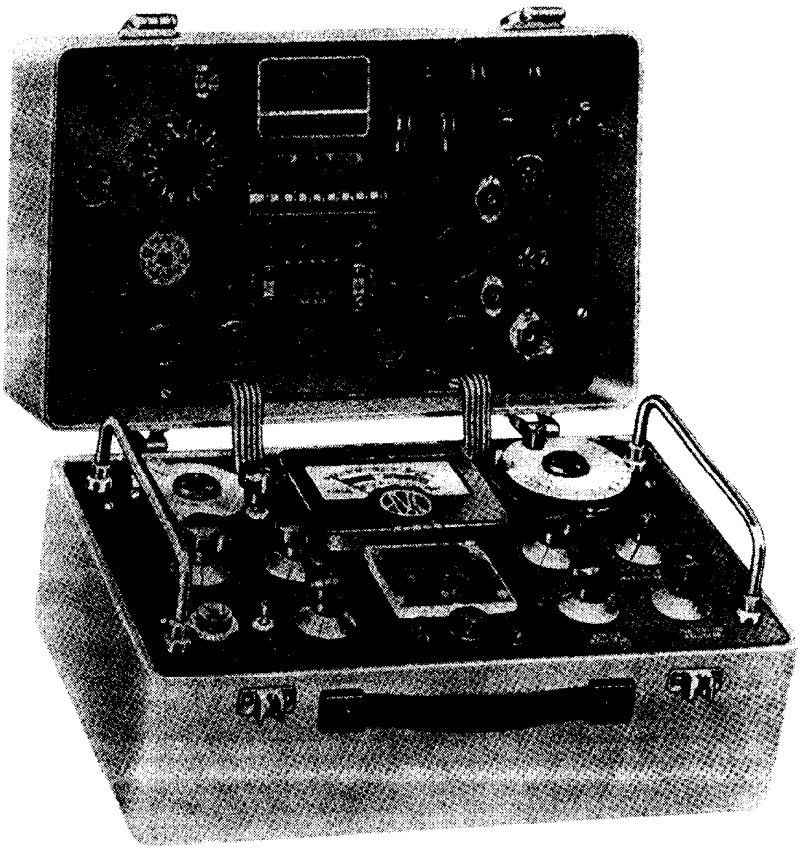

The AVO Valve Tester Type 160

Operation on AC

The clever idea was to realise that the valve under test could do its own rectifying. If an alternating voltage is applied to the anode of a valve, anode current will flow only during the half cycles when the anode is positive; and a DC meter in the anode circuit will read the average value of this pulsating uni-directional current. Similarly a screen grid can be supplied with AC, in phase with the anode AC so that the screen voltage will at all times be a fixed proportion of that on the anode.

The control grid voltage must also be of AC form, but must never go positive if grid current is to be avoided. To satisfy this condition, positive-going half cycles of the grid AC supply are chopped off by a rectifying diode, a very low-power one being sufficient since no current is drawn. Thus the grid voltage is a series of half cycles, of the same form as the anode current.

The anode voltage, anode current and grid voltage waveforms are shown in ***Fig.1a*** from which it can be seen that everything is properly shaped and times - or is it? Some, or all, readers will have spotted that the negative-going grid pulses occur between the anode current pulses, that is when the anode current is cut off and the grid voltage can have no

Continued on next page >

Instruments

> *Continued from previous page*

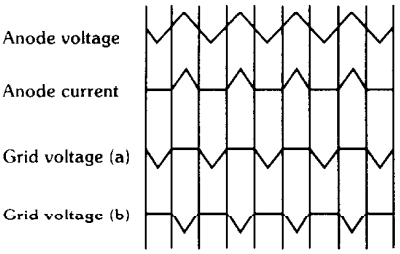

Figure 1

effect. What is needed is for the AC applied to the grid voltage rectifier to be in antiphase to the anode AC. Doing this, as in ***Fig.1b***, gets the control grid pulses to appear at the same time as the anode current pulses, thus allowing the grid voltage to control the current as required.

So we reach the point where, without a cumbersome DC power unit in sight, the valve under test has appropriate anode, screen grid and control grid voltages and is passing uni-directional current which can be measured with a DC milliammeter. Suppose the test conditions for the valve are 100V DC on the anode and - 10V DC on the grid. What are the AC voltages we need to apply to be equivalent to these DC values?

The required AC values can be derived mathematically and come out as follows. The rms AC anode (and screen if applicable) voltages must be 10% greater than the equivalent DC voltages, so we must apply 110V rms to get the equivalent of 100V DC. The rms AC voltage applied to the control grid voltage rectifier must be about 1.5 times the required DC, needing about 15V rms to get the equivalent of - 10V DC.

The anode, screen and control grid AC voltages are obtained from switched tappings on the mains transformer, the three voltage selector controls being calibrated in the equivalent DC values.

Anode Current Measurement

As shown in ***Fig.2***, the test valve has a low-value series resistor in the anode circuit, the voltage developed across which is of course a measure of the anode current. This voltage is matched by a voltage from a calibrated potentiometer across a mains transformer winding. The meter is connected between these two voltages and the potentiometer is adjusted for zero meter reading, indicating exact balance between the two. The potentiometer scale is calibrated to show the equivalent DC anode current.

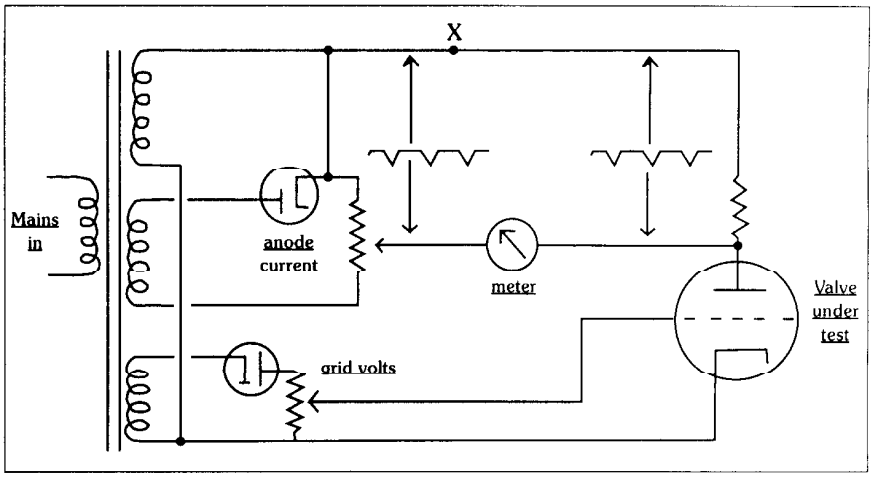

Figure 2

Note that the anode current waveform across R is matched by the waveform across the upper section of the balancing potentiometer. Station yourself at point X (ignoring the fact that you will be bouncing up and down at 50Hz!) and look at the anode. The current pulses will produce negative-going half cycles there. As first sight it looks as though the rectifier feeding the anode current potentiometer would produce positive pulses; but now consider the slider of the potentiometer with reference to point X, and you can see that here also there are negative-going half cycles.

The anode current waveform is a series of half cycle pulses and the calibrated matching voltage from the potentiometer must of course have a similar waveform. Accordingly another low-power rectifier is included in the feed to the potentiometer to chop off alternate half cycles.

Mutual Conductance Measurement

Mutual conductance is defined as the change in anode current resulting from a unit change in grid voltage, measured in mA/V.

Once the standing anode current has been offset by balancing as described above. a small change in grid voltage is introduced which increases the anode current and deflects the meter up from the zero position. The meter scale and an associated control are calibrated in mA/V mutual conductance values.

Other Measurements

The instrument also provides for measurement of other valve parameters such as heater/filament continuity, grid current in a gassy valve, and inter-electrode insulation. The circuitry for these tests is straightforward, although complex switching is needed.

Measurement Accuracy

High-quality potentiometers and 1% high-stability resistors ensure accuracy of calibration.

Accuracy also depends crucially on correct AC voltages from the various mains transformer tappings. The transformer is designed carefully to achieve this, and provision is made for primary tappings to be selected in steps of 5 volts to match the exact input mains voltage. A 'SET' position gives meter indication of the correct setting.

Conclusion

Although accurate and versatile, this valve tester is a comparatively simple instrument. If you look inside you will find two mains transformers (one of which is for heater/filament supply); two small double diodes of the D77 type; a number of resistors, both fixed and variable; three capacitors; a 32 micro-amp meter; and some complex switching. Not very much in view of all it can do!

The British Vintage Wireless Society is mainly concerned with researching and preserving the technology of the subject, but many members are also interested in its social history, which is just as worthy of preservation. Here, our Information Officer, Dave Adams provides a personal reminiscence which tells of the excitement that many people found in it in the early days when they built their own receivers. He has for some time been looking after the library and information services at Gerald Wells' Vintage Wireless Museum at Dulwich, London.

A first - and last hobby

by Dave Adams

At a very early age, when I was seven or eight, two great events took place, about the same time, in my home.

The first was the wiring of our house for electricity. The wonderful paraphernalia of wire, switches and lights, not to mention the distribution board with its meter and fuses (on the wall by the front door) took hold of my imagination and I decided that this was for me. The second event was the arrival of a valve set with its even more wonderful array of components, I was completely, and forever, hooked.

One of our neighbours constructed his own set. I could imagine no greater hero. He was the acknowledged 'wireless expert' of the neighbourhood. Thus was an ambition born.

Of course, as a child, I was not allowed, yet, to touch this marvel. Meanwhile I could only admire from afar its fascinating bits and pieces but I could fully enjoy the entertainment and knowledge of a world beyond the home that it brought me, as I have continued to do ever since. But I was given the discarded crystal set to play with. I promptly dismantled it to see what was inside. Great was my disappointment to find only a coil of wire with wires going to the contacts on the panel. I seem to remember making circuits (although I do not suppose I knew that word then) to see what might happen. I think I employed bits and pieces and old batteries from torches that I had previously dismantled. This kind of 'vandalism' is, I think, a vital part of learning.

I began, however, to make a serious effort to find out more by borrowing books from the library, I remember a chapter on the 'oscillatory circuit' and mention of a condenser and inductance. I might just as well have been trying to read Greek and I almost gave up.

But by now the family and friends must have learned of my enthusiasm. Other pieces of discarded apparatus came my way and having possession of things that I previously had only encountered in books I did make progress. One book I am specially grateful to is F. J. Camm's 'Wireless Encyclopedia'. I began to buy wireless magazines – when funds allowed.

I did eventually progress from destruction to construction and by the time I left school I had knowledge enough to enable me to get a job in the wireless trade. For most of my, short, professional career I was working n the design department. I could not have been luckier. My boss was a patient tutor. I have been eternally grateful for the knowledge he imparted. It has been source of pleasure for the rest of my life.

I have already mentioned the enjoyment I obtain from radio listening. This occasioned a rebuke from my fellow workers who threatened to mute me with a pair of headphones. I used to be impatient with 'silent' work with, say, a signal generator and output meter. I wanted to hear the sets play with the stations romping in and with a good healthy volume emanating from the speaker. Still, today, I am never happier than when listening while engaged in some manual task. I think the fact that radio does allow one to do this (unlike the box which generally requires that you should look at it) is, for me its greatest charm.

During the war I was a wireless-operator mechanic. Again I was lucky in that I had a varied career. It included high-speed telegraphy – with the old Creed apparatus – and also radio controlled aircraft – known as the 'Queen Bee' in its time. Of course there was always repair and maintenance but this was not often required on service equipment. It was mostly civilian sets that came into the workshop. Some weird and wonderful 'mods' were perpetrated when the right valve or component was not available.

After the war I felt that I had been left behind by all the progress and so I changed my job. I 'kept my hand in' to a certain extent by buying sets at jumble sales (for shillings and sometimes pence!), repairing them and then giving them away or, eventually, dumping them. With the arrival of transistors I tried to learn something of the technique required but somehow I never warmed to them. Other hobbies came along – model making etc – prompted by my sons' interests and I turned my back on radio.

But eventually a marvellous thing happened to me. I discovered Gerry Wells' Museum and the B.V.W.S.! I had, by this time, retired and so here I was back with wireless as I knew it and with the time available to indulge as I wished. I was overjoyed to find that my little bit of 'fossil' knowledge could be put to use again.

I know, from my correspondence and from visitors to Gerry's Museum, that there are still many who would like to make the same discovery. I do my best to 'spread the word'.

I shall certainly not be abandoning the hobby now and that is why I deem it my last, as well as, my first hobby.

***Editor's Note:** we should welcome personal reminiscences of this kind from members. Rough notes will do – we are happy to turn your raw material into an article!*

Receiver Techniques of the 1920's

Part 10

by Pat Leggatt

Here is number 10 of a series of short articles by Pat Leggatt reviewing the circuitry and other features of wireless sets of the 1920's. Each article will outline a particular aspect of sets of this period. Back numbers of Bulletins in which earlier parts appeared can be obtained from The Editor.

Detectors and LF Stages

Although Fleming invented his 'oscillation valve' with radio signal detection in mind, the diode was never used as a detector in the 1920's once triodes became available.

Two configurations of triode detector were used, anode bend and leaky grid. In the anode bend detector, the grid was negatively biased as that the operating point was on the bottom bend of the anode characteristic, thus providing the non-linearity necessary for demodulation of the incoming signal. No grid current flows in this condition and there is accordingly little damping on the grid tuned circuit and selectivity is unimpaired. But the anode bend arrangement was used comparatively seldom, owing to the complication of providing the appropriate grid bias.

By far the most popular was the leaky-grid detector, in which the signal is fed to the grid via a capacitor of a few hundred pfd and a 'grid leak' of about 2 megohms provides a DC return (Fig 5). The modus operandi of this circuit was often imperfectly understood and many rather weird explanations were put forward. For large signal inputs it is in fact most easily explained in terms of the black-level clamp or peak rectifier familiar to television engineers, the grid/cathode diode clamping to earth potential the positive peaks of the input signal and the resulting negative 'DC component' being of course the required audio modulation (superimposed on a standing direct voltage equal to half the RF carrier amplitude) which is then amplified by the valve acting as a triode. For smaller signals, detection relies on the curvature of the diode characteristic and the grid leak was often returned to the positive side of

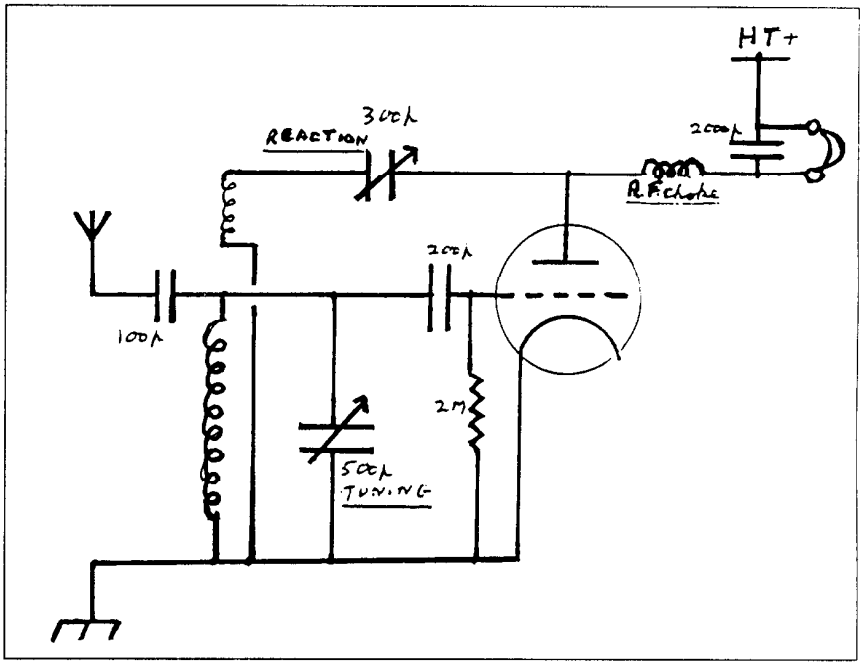

Fig. 5. Reaction and leaky-grid detector

the filament supply, giving the grid a small positive bias to lift the operating point off the very bottom bend where the slope was nearly zero and small signals almost lost.

The grid current inherent in this action exerted some degree of damping on the input tuned circuit, but this could be largely compensated by application of reaction round the detector.

The leaky-grid detector is not suitably biased for linear triode amplification and exhibits some consequential audio distortion. But this was largely masked by the worse distortion of 1920's transformers, headphones and loudspeakers and so was usually unnoticed in the average domestic installation. The LF amplifiers and loudspeakers of early years were 'volume generators' rather than faithful reproducers of the transmitted modulation. This was in fact the right order of priorities for the time, since it was good volume that was wanted by a public frustrated by having to use headphones or to suffer the inadequate loudspeaker volume from insensitive sets. Contemporary advertisements were sometimes on the lines of "programmes can be clearly heard 100 feet from the loudspeaker" and one manufacturer proudly marketed his sets under the names "O-Solowd"!

Regarding valves for driving loudspeakers, the very early R types were quite unsuitable with little filament emission and high anode impedance of the order of 36 kilohms. Quite soon though, in 1922/23, the LS5 valve was developed with only 5 kilohms impedance; and later the LS5A, with even lower impedance of 2750 ohms, was capable of very adequate power output at moderate HT voltages. The LS5 was rather greedy as regards filament heating power (0.8A at 4.5V) and as the 1920's wore on it was replaced in domestic receivers by more economical types with 6V, 4V or 2V oxide-coated filaments. LF intervalve coupling was usually effected by transformers on account of the additional voltage gain so offered, although resistance-capacitance coupling was also fairly common. Many of the early transformers were designed with cost rather than performance in mind; and inadequate iron cores and low primary inductances left much to be desired in terms of amplitude distortion and low-frequency response. Two LF stages were often provided, and sometimes three, so that instability in the form of howls or motor-boating was always a possibility: but frequency response limitation were actually some help in this context and common impedance couplings were avoided to some extent by having each stage fed from its own tapping on the HT battery, or sometimes by decoupling HT feeds to individual stages.

Tone controls were seldom seen in English sets of the 1920's, but a 1924 American Grebe receiver embodied a 'tone colour' control in the form of a capacitor and variable resistor across an LF transformer primary.

Feedback

Letter
from Pat Leggatt
Charger la Femme

About a year ago in Bulletin 17/3, Ron Jones asked for information on a strange 9 volt grid bias battery with nine terminals of which two were marked 'Femme' and 'Homme'. Another surprising feature was that the battery had a removable cover and that this and the case itself was covered in black leatherette a good deal smarter than a normal grid bias battery. I recently bought this battery from him at the Wootton Bassett meeting and was prompted to investigate further. I cannot claim to have solved the mystery myself, but at least I knew who to ask and I wrote to Guy Biraud in France who is one of the world's leading experts in all aspects of vintage wireless.

Sure enough, Guy knew all abut it. It is not a radio battery at all, but rather one for a medical electro-therapy apparatus from the early 1930s, made by Chardin of Paris who was a manufacturer of quality devices in this field. I attach the circuit of the battery, from which it may be seen that there are two wire-wound resistors inside the case. Without knowing the exact way in which all the battery terminals were used, it can be seen that terminal 1 (Homme) would apply nearly the full voltage of the battery, while terminal G (Femme) includes a series resistance of quite high value.

The theory, in the best traditions of Gallic chivalry, is that delicate ladies have a lower resistance than gross men (lower resistance to electric current that is!) and must therefore be subject to less than the full output power of the apparatus.

Nowadays of course such an arrangement would be regarded as sexist, and the ladies would be expected to put up with the full whack!

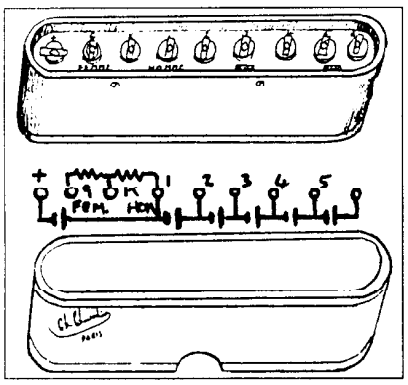

HOUGHTONS
The National Wholesalers

EKCO

MODEL A.D.65
6-Stage Superhet.—For Universal Mains

Magnificent bakelite cabinet available in two finishes, figured walnut, and black with chromium-plated fittings. Universal - for use on either A.C. or D.C. mains without adjustment (200/250 v.)

Six-stage superhet circuit with band pass tuning. Full delayed automatic volume control. Interchangeable super-size station scale with names and wave-lengths. Colour code wave band selector. Single-knob control. Light beam and shadow station indicator. New type valves including octode frequency changer, H.F. pentode, double-diode pentode and rectifier. Moving coil speaker. Output 2·5 watts. Wave-length range: 200/550 metres and 900/2,000 metres.

Dimensions: —15½ × 15½ × 8 in.

Valves supplied: —Mullard FC.13, Mazda VP.1321, Mazda Pen.DD.40/20, and Mullard UR.2.

Consumption:—A.C., 70 watts: D.C., 65 watts.

Standard Model (Walnut finish) £11 0 6
(H.P. Terms:—19/- down and 12 monthly payments of 19/-)
Also available in cabinets of Onyx Green, Pearl Ivory or French Grey at £2 2 0 extra.

Black and Chromium Model £11 11 0
(H.P. Terms:—£1 down and 12 monthly payments of £1)

Wooden Stand (Walnut or Black finish) £1 9 6

MODEL A.C.85
(For A.C. Mains, 100/130 v., 200/250 v. 40/100 cycles)

Eight-stage superhet circuit with band-pass tuning. Exclusive station pre-selector and automatic noise suppressor. Fully delayed automatic volume control (amplified). Interchangeable full-size station scale with names and wave-lengths. Colour code wave-band selector. Variable tone control. Light-beam and shadow station indicator.
Gramophone pick-up sockets with switch. Volume control operating on radio and gramophone. External speaker sockets. Moving coil speaker. Switch for disconnection of internal speaker. Output: 3·5 watts. Magnificent bakelite cabinet available in two finishes, figured walnut or black with chromium-plated fittings.
Dimensions:—20¾" × 12¾" × 9½"
Valves supplied:—Mullard FC4, 354V, 2D4A, IW3 or Mazda VS14, AC/VP1, AC/Pen., UU9.
Consumption:—64 watts.

Walnut finish £13 2 6
(H.P. Terms:—£1 2 6 down and 12 monthly payments of £1 2 6)
Also available in Cabinets of Onyx Green, Pearl Ivory or French Grey at £2 2 0 extra.

Black and Chromium £13 13 0
(H.P. Terms:—£1 3 6 down and 12 monthly payments of £1 3 6)
25-cycle Models, 10/6 extra.

Wooden Stand (Black or Walnut finish).. .. .. .. £1 9 6
(H.P. Terms:—Add 2/6 to deposit and each payment)

Pictured above are pages from Houghton's 1932 catalogue offering coloured Ekcos, but by the following year mention of these was omitted. Of over 100 sets illustrated only 9 had bakelite cabinets (all Ekcos) giving an indication of their popularity at the time. Below is a letter regarding Sunco's 1932 catalogue for which the story was the same.

Letter
from Geoffrey Dixon-Nuttall
Coloured Ekcos

It may be of interest that in my wholesalers' catalogue (Sunco, 1932) the following Ekco models are listed: 312, 313: Mahogany as standard, dark jade and medium oak to special order. RS2, RS3: Walnut as standard, dark jade and mahogany to special order. In later catalogues, the round models are only quoted in brown or black. So it looks as though they started by offering a range of colours, but found they didn't sell (Has anybody seen a green RS3?)

Which brings me to a story which is so sad I can hardly bring myself to tell it. My gardener happened to come in to the workshop one day where I was testing an AC86. Quoth he "Oh yes: I once broke up one of those. I was working for a man who had an old one, so we smashed it and put it on a bonfire. Only it wasn't like that: it was dark green". When I had recovered I asked him for details. It seems that it had the metal trims as used on the black model, but they were finished in gold.

So there we are, another £20,000 down the drain!

"The Birthplace of Television" a pen-and-ink drawing by Moira Hoddell, held by the Royal Television Society and reproduced here with their permission. The caption to the drawing reads "In the attic of this building, 22 Frith Street, Soho., John L. Baird first demonstrated television of living images on January 26th, 1926".