BULLETIN OF THE BRITISH VINTAGE WIRELESS SOCIETY

ISSN 0955-9345

BVWS BULLETIN

VOLUME 20 NUMBER 4 AUGUST 1995

BULLETIN OF THE BRITISH VINTAGE WIRELESS SOCIETY

Chairman: Willem Hackmann
26 Portland Road, Oxford, OX2 7EY
Tel: 01865 54058, 01865 277282 (work)

Bulletin Editor: Carl Glover
c/o BSS, 1 Rothsay Street, London, SE1 4UD
(to whom all editorial enquiries should be addressed)
Tel: 0181 469 2904

Minutes Secretary / information Officer: Dave Adams
69 Silver Lane, West Wickham, Kent BR4 0RX
Tel: 0181 776 1531

Events Organiser: Ken Tythacott
21 Barrett Road, Fetcham, Surrey KT22 9HL
Tel: 01372 452569

Technical Adviser: Gerry Wells
Vintage Wireless Museum,
23 Rosendale Road, West Dulwich, SE21 8DS
Tel: 0181 670 3667

Membership Secretary/
Membership applications: Mike Barker,
28 Cheney Manor Road, Swindon, Wilts SN2 2NS
Tel: 01793 536040

Newsletter Editor: Ian Higginbottom
5 Templewood, Ealing, London W13 8BA
Tel: 0181 998 1524

Treasurer: David Read
25 Temple Fortune Hill, London, NW11 7XL
0181 455 9523

Ordinary Members: Rupert Loftus-Brigham, Peter Bannon

Contents:
Bulletin of the British Vintage Wireless Society
Volume 20 No.4 August 1995

Front Cover: A Philco 527 'Peoples Set'
Rear Cover: Detail of a Pilot U 385 superhet

Photography by Mark Groep

From the Chair

The Marconi celebrations are now in full swing and will go on for some years, as there are many key events which can be celebrated.
Bologna, the birthplace of Marconi, saw the opening (and by now the closing) of a glittering exhibition with the poetic title, *Radio, from Marconi to the Music of the Universe*, in the Palazzo del Podesta (you should have received an order form for the exhibition catalogue, price £15, in the previous *Bulletin*). The title may well be an intentional allusion to the attempt by the sixteenth-century astronomer Johannes Kepler to relate planetary motion to musical notation - hence his 'music of the spheres'. Perhaps it is going too far to equate Marconi with Kepler. Certainly, the legacy of Marconi is very noisy - a universe, bathed in a permanent (all pervasive) cacophony, while Kepler's planetary music could only be heard in the mind. The Society, too, should celebrate Marconi's epoch-making experiments, thereby following the lead set by Enrico Tedeschi in his Marconi exhibition in Hove which featured in the previous *Bulletin*. Various ideas are being mulled over by the Committee, and suggestions from you will be most welcome, but we will have to make up our minds soon now. On the whole you seem to be well pleased with the new format of the *Bulletin*. I have, however, received several complaints about the lateness of the last issue, and for this we apologize. The Editor has to fit work on the *Bulletin* around his full-time job, and you can well imagine the great deal of preparation that goes into each issue. The Committee is trying to alleviate the Editor's work load as much as possible. In fact, I feel that six issues per year are too many. This simply does not leave enough time between issues for all the work that needs to be done. My suggestion is that it would be much more sensible to revert to the previous arrangement and produce four solid issues per year, but achieve increased flexibility by having six Newsletters instead of the present four. In this way the year would be well covered. The new version of the Newsletter would be more extensive than the present production as it will include your letters and queries. An important advantage would be that because of the frequent publication of the Newsletter there could be a rapid response to your queries concerning, say, a peculiar circuit diagram or on how to wind a particular coil. Let me know what you think. In the meantime the Committee is considering all the ins and outs. The new arrangement would start with the first issue in 1996.

Thinking about 1996 brings to mind the elections of Officers and Committee Members for next year. I do not know where the months have gone - although, of course, this has been a very short year for the present Committee which were not installed until May! Elsewhere I am discussing the arrangements for the election in which, I hope, you will all be able to participate. Any society can only be as good as its *active* membership. In the meantime I wish you all a glorious summer (or what is left of it). Happy hunting!

Willem Hackmann

Thanks to 'The Setmakers' for use of Alphian chair photograph

photo caption: The BVWS' very first meeting, held at Chelmsford on Sunday 29th May 1977. This was quite a sober affair - no buying and selling, just looking. How different things are today! Recognise anyone? Left to right: Phil Taylor, David Read, John Gillies, Jonathan Hill and Ian Higginbottom survey the display - mostly from the 1920's. We think the chap with the camera is a friend of Bill Jourmeaux, but we can't remember his name, nor the person wearing the collar and tie on the far right? Is it you?

BVWS 1977

The BVWS was formed on Sunday April 25th 1976 and so next year marks the Society's 20th anniversary. I am compiling an archive of photographs on the BVWS' own history with the intention of writing an illustrated article for this important anniversary. Can you help? Have you taken any photographs yourself of any BVWS meetings or events in the past? I am looking for *any* photos, of *any* meeting / event (including Gerry Wells'), of *any* date, even the most recent- although I would especially like photos of early meetings, like our first one in 1977 (see above), or the V&A Wireless Show (same year), or meetings at St. Albans, Harpenden, the Chalk Pits or any regional meetings. Please send any negatives or prints you can spare to Jonathan Hill, BVWS Photo Archive, 2-4 Brook Street, Bampton, Devon—they will be copied and returned if you wish, or, after the archive is compiled and catalogued, presented to the BVWS.

Rebuilding Colossus

Colossus, the wartime computer which helped break Hitler's messages to his generals is currently being rebuilt in Bletchley Park. Tony Sale, the man in charge of this important project hopes to have it running by the end of the year but is in urgent need of the following valves: GT1C Thyratrons, EF36, 37, or 37A, 6J5 or L63. All donations will be gratefully received. Please send valves to:
Tony Sale, Director Colossus Rebuild Project, 15 Northampton Rd, Bromham, Beds MK43 8QB

Bonus pages

Bulletins from this issue up to the end of the year will be having an extra four pages, as it has been found that the price of printing a 20 page Bulletin is almost the same as a 16 page one.

The Philco People's Set

The Philco model 444

Quite recently I had the idea of taping onto cassette Gerry Well's opinions and experiences with various pieces of Wireless apparatus for the benefit of Bulletin readers. Hopefully this will be a regular section, as, after all, there is only one Gerry Wells.

The interview was conducted in Gerry's kitchen, whilst drinking some of the world's strongest tea. What you read is exactly what Gerry said during the interview

Carl Glover, August 1995

"I suppose by 1936 the British radio industry had certainly reached its height. The five valve superhet was the norm, multiple valves had come along, we still had valve holder tax, but we were limited to four taxable valves; rectifiers and barretters weren't actually chargeable so we could get away with those two. Multiple valves like pentagrids, octodes, triodes, pentodes, double diodes and output pentodes were readily available so a small superhet could be made quite reasonably. Nevertheless you still couldn't get a superhet which was both long and medium wave and which would actually work well off the mains AC or DC, in a reasonable cabinet for under say ten or twelve guineas.

You could however get sets from America or the Continent for a fraction of the price of an English set, but a good deal of propaganda was put about to stop us from purchasing one. If it was American, that was bad enough, but also it was liable to be flashy. It might even be brightly coloured which was even worse, using a range of valves which weren't readily available in this country thanks to the help of the BVA.

We naturally overlooked the fact that we had a valve holder tax, BREMA or its equivalent to make sure the overall price of the set was kept nice and high and, of course, that wonderful shower called the BVA who made sure that only British valves were used in British sets and that their price was kept at a 'sensible level'. In other words nothing much under ten and sixpence or approximately a quarter of a week's wages of the average working man.

But as I have already said there was nothing both locally made and cheap, so being British, we set up a Committee to find out why. It was called the Ullswater Committee and it was chaired by Lord Selsdon, who had been Postmaster General, lost his post and was looking for something to do. The Committee was set up to investigate broadcasting in every aspect, as well as the high price of domestic radios. After a lot of expensive lunches and hot air, a challenge was put out to the radio industry to do something about it.

One of the main companies to take up that challenge was Philco. They had, a few years previously, opened a huge manufacturing plant in Wadsworth Road, Perivale near Greenford Underground Station in West London. It was originally known as the Philadelphia Storage Battery Company: a massive American concern that started life making car batteries. It decided it wanted a chunk of the English market and the only way it could do that was to come to Great Britain and set up a factory, using British labour and a certain amount of British parts.

"Oh yes" they said, they would turn out a set for six guineas and they did. It was just about half the price of an average English set, but I don't think they made an awful lot of money out of it. For a start, I think they made use of Eric Cole in Southend for cabinets who produced a rather pretty beehive shaped cabinet in lovely black bakelite. It was pleasing in appearance with just the right height, width and shape for the average living room. They made a chassis for it, which just about fitted in, used a six inch energised loudspeaker with an output transformer attached to it, a full size mains transformer and the simplest possible aerial and oscillator coils. They put one IF transformer in a can and one without, under the chassis, where it was well shielded from everything else and even managed to leave off one of the trimmers and it still worked. They strapped all the screens together, and decoupled them en bloc so that they could cut down on resistances and the condensers, and did the same with the cathodes. They used a multiple electrolytic, which gave good smoothing, a simple wavechange switch, an ordinary volume control and they used their new 6A7 pentagrid frequency changer: a lovely six volt American bottle, which was very efficient. It saved having a separate oscillator, it was small, neat, compact and very reliable. They used the old standby of a 6D6 or a 78 as the IF valve. But to keep the BVA happy, they also used a special valve made for them called a PEN DD61. This to all appearances was our old friend the AC2 PEN DD, which we had known for a couple of years and had learned to love or hate, depending on what set it turned up in. They did a six volt version and it was made by Mazda specially for them, and they used a number 80 type rectifier as a standby which didn't matter much because there was no valve holder tax on that. So we had two or three American valves and one English valve. Everybody was happy. They put it on a nice pressed steel chassis and gave it a very quick flashing of cadmium plating, which would last about two years before it fell off and went rusty. It had a large celluloid dial, a dial bulb of the small bayonet variety, which, if it was placed badly, would invariably burn a hole through the dial for you. The back would usually shrink and fall off. But it worked! And it worked well! It covered the whole of the medium wave from 200 metres up to 550 and it covered the whole of the long wave. It only needed about three or four yards of aerial wire and it would pick up all the

The Philco model 333 (battery only)

leading stations in Europe as well as our regional stations. It was brilliant. When it was lit up and working, it looked well and sounded well. All that for six guineas, brilliant!

They called it the Philco 444. They made about half a million of them. They launched it on the British public through any avenue available but could get very few takers as the public said it couldn't be any good as it was far too cheap. "You can't buy a wireless for six guineas?". Philco thought they were going to go bust. They thought they had lost the lot because they hadn't much of a profit margin to work with - not after the wholesaler and the shopkeeper had something out of it as well.

But they were lucky. In the middle of 1936, the Spanish Civil War had started, and as you well know it was a testing ground for Communism and Fascism and a new buzz-word had appeared - 'people'. Up to that time we were quite happy with 'folk', 'geezers', 'ladies' and 'gentlemen'. But 'people'? The new *cause* was for 'people', 'people's rights', 'people's houses'. Philco decided to call their new set 'People's Radio'. They had spread the word amongst the trade generally that if you bought a 'People's' set you were not only supporting the International Brigade, but you were also supporting the Labour Party. They sold every single one, and it was then of course that they realised that only half the British houses were AC mains and they were selling an AC set. Everywhere else was DC mains or battery, so they brought out the AC/DC version - the 537. It

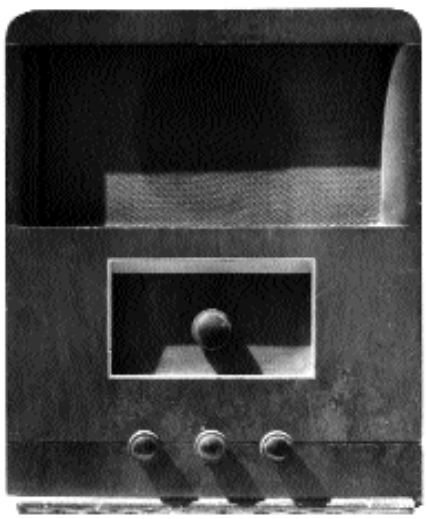

The wooden version of the 'Peoples Set'

had a lovely fat barretter in it and didn't use a mains transformer so that gave a bit more money to play with; which meant a 43 output valve, a number 75 double diode triode to give you the gain, a 6D6 and a 6A7. Some of them actually had a short wave band stuck on them. With this model Philco started experimenting with the cabinet; they used a reddish brown mottled finish, which in the sunlight is very pretty. If you get a good one it looks marvellous and they used a colour printed dial, which lit up red, green and blue. It was seven guineas, but met the demands for the DC. After the 537 came the battery model - the 333. It was in black bakelite, slightly taller and wider in the hips that the 444. It had a little shelf inside it, which held an accumulator and an HT battery. Funnily enough, this model used English valves; they were Mullard ones, renumbered. It was only a very simple TRF but it was very efficient and worked well although goodness knows how.

So you have the three main types and to this day they are still reliable. The first thing that you have to do when you get a 'People's' set is to remove the rust from the chassis, because that flashing of cadmium plating didn't keep the rust away for long. The best way to do that is to remove the tuning gang from the chassis, loosen all the screws that stick through the chassis which will damage you fingers while you're scrubbing it, get at it with a can of WD40 and your wife's green pot scourer and the chassis should come up *reasonable*. On the tuning gang put a couple of grommets in the holes as these always perish and that brings it up to the right height again. Tighten up those lovely engine mounting bolts that they stuck underneath it to hold the condensers on, and naturally you've got to change the electrolytic and the mains lead because these would have disintegrated by now, but otherwise that's all you normally need to do.

There is always one thing that has puzzled me about the 'People's' set ever since I was about seven or eight, when I first started looking inside radio sets and that is the loud speaker lead, which is a three core lead and has the retaining knot on the outside of the chassis, instead of inside it. It had an odd IF frequency of 451 Kc and it will peak up to that quite nicely. Another curious thing is that it had a stray fly lead going from the oscillator section of the tuning gang with one loop wrapped round the lead going to the mixer grid. This gave you a little extra oscillator coupling. A lot of people get hold of this, think it's come off and solder it onto the other wire. The set never works again! If the pen DD61 output valve goes completely, you can replace it with an AC2penDD and put a one ohm wire wound resistance in series with the filament and that takes it down to four volts which works. Nearly always the problem with the pen DD61 is the top cap. The valve gets so hot that the solder in the cap oxidises and you get a high resistance joint between the cap and the wire. So put your soldering iron on it and flick out all the spare solder, scrape the wire clean with a knife and resolder it. All your fizzing and crackling and buzzing in gone, the valve will probably keep going for another fifty years.

Otherwise a fine little set".

A Schoolboy hobby and a professional career

A personal story by Larry Coalston

My interest in 'wireless' began in 1936 when I was 10 years old and was given a book on crystal sets written by a Mr.C.L.Boltz. This contained several types of crystal sets and details of how to make basket weave coils. One particular chapter was devoted to the construction of a medium wave radio in a matchbox, using suitably thin wire, wound so that the coil on the inner part of the box pushed in and out of a coil on the outer and served to tune to the station, - a sort of variometer. I remember that the crystal and cats whisker assembly which I glued on the top of the box, was quite large.

I followed my success with this novelty item by buying a book about valve receivers and purchasing the second hand parts to construct a small portable one valve set from details published in 'Practical Wireless.' (using a miniature Hivac valve) This was designed to be fitted into a wooden cigar box and the HT of 18v. was supplied from two grid bias batteries. I used to take a parcel of the set and batteries with a pair of 'Ericsson' headphones to the school playing field on cricket days. During the summer holidays I visited the centre of Bristol where there were two arcades with a number of shops displaying old wireless parts and even complete sets for sale at knock down prices. I remember buying an old Cossor 'Melody Maker' for 1s6d. and having to buy 3 Mullard PM2 series valves for 2d. a time to make it work, as well as an HT battery for 4/- and having to carry the set home on the bus with a separate journey on foot for the valves and battery as I had no money left for a second bus fare. However, when I connected it all up it worked quite well and I was able to keep the volume and re-action under control so that I could hear 'What the Wild Waves were saying'. Trying it out after dark I was able to listen to several foreign stations.

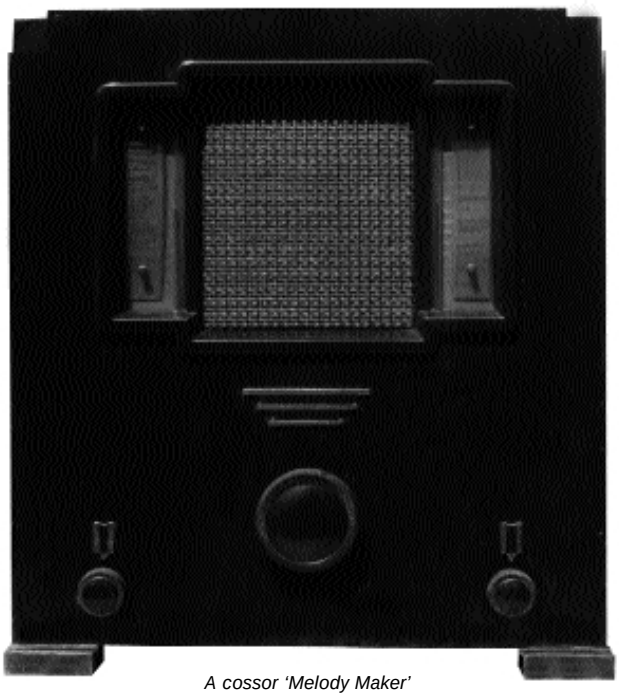

A cossor 'Melody Maker'

I often played my favourite gramophone records on the family gramophone and with my interest in wireless it was not long before I added an electric pick-up to replace the soundbox. This was 1939 and the family had purchased an all mains Ultra 3 wave band radio with a moving coil loudspeaker. When I first heard my 78 rpm discs reproduced from this speaker the quality of sound amazed me. However in true teenage spirit, I decided to visit the arcade shops again and purchase my own apparatus. This time I settled for a Blue spot moving iron speaker in a light oak veneered curved plywood cabinet and a small add-on 'Class B Quiescent Push Pull' unit with a double triode valve. By this time I had also acquired a battery eliminator for the HT but still had to use a 2v. LT accumulator. My strong interest in Wireless led to the purchase of second-hand mains sets and to the construction of several small amplifiers and one valve short wave receivers which could pick up broadcasts from the USA.

During World War 2, a new civil aviation organisation called BOAC. moved to Bristol (Whitchurch) airport and opened a Radio Service workshop. I wrote asking for a job - my first after leaving school - and was offered employment as a 'Radio Improver' at a rate of 5d per hour with time allowed for technical training. However, I can't recall that I actually improved any particular aircraft radio set!! This was my first work experience of the radio profession and was followed by national service in REME as a qualified Telecommunications mechanic.

Later in 1946, I became fascinated with the latest wonder of Television and became a member of The Television Society (before it was granted a Royal charter) and worked for Philips Electrical Ltd. on their large screen projection sets. I also became very interested in the studio and transmission side of Television and eventually wrote to the BBC for a job in Engineering and after attending a technical interview and appointment board I was offered a post as a Technical Assistant in Television Outside Broadcasts London. Over the next few years I attended BBC Engineering courses and qualified as an Engineer and remained with them, working in various departments for the next 33 years before retiring in late 1985.

Larry Coalston. BBC tv Engineering. (retired)
BVWS. 7th December1993.

Obituary

Jeanne Cordrey, the daughter of Captain H. Round, sadly passed away recently, due to a heart-attack.

Round, whilst working for Marconi was involved in the development of the thermionic valve. Although not the first to register a patent in this field (the first one was registered in 1913, Round did his in 1914), he had demonstrated the device in a broadcast between the Marconi building in the Strand to the Savoy Hotel in 1913.

After the first world war, Round; who had been involved in the further development of radio direction finding for the Royal Navy, started work on the manufacture of a more powerful transmitter valve, subsequently to become the MT1 & MT2. The valves were first used in an Irish station, which became the first European station to be picked up in the United States.

Jeanne Cordrey was a talented sculptress, who will be sorely missed by her friends and family. We express our sympathies to everyone who knew her.

Valves: What they do and how they do it parts 7 & 8

By: Pat Leggatt

PART 7

The Triode as a Detector

In superhet receivers of the 1930s and later, detection was always effected by a diode: but in the sets of the 1920s, a triode was usually employed for this.

There were two ways in which triodes were used as detectors, leaky grid and anode bend. Figure 9 shows the circuit of a leaky grid detector and in fact it simply uses the triode grid and cathode as a diode detector as described in a previous article of this series. The radio signal is fed to the grid via the capacitor C, and the rectified current through the grid/cathode 'diode' produces an output signal voltage at the grid across the load resistor R. Sometimes the load resistor is connected in parallel across the capacitor rather than between grid and cathode, but this really makes no difference.

This is known as a leaky grid detector because the negative signal voltage developed at the grid leaks away through the 'grid leak' resistor R. A disadvantage of this form of detector is that the grid/cathode 'diode' draws some current and loads the preceding signal input circuit. This will be a tuned circuit in a receiver and the loading will reduce the sharpness of the tuning and so spoil the selectivity of the set.

An alternative form of triode detector is the 'anode bend'. In this the valve is given negative grid bias to the extent that the valve is working on the bottom bend of its characteristic where the curve is far from a straight line. Detection takes place just as described in a previous article of this series regarding small signal detection on the curved characteristic of a diode. With the anode bend arrangement, the triode grid never becomes positive to the cathode and no grid current flows. There is therefore no loading on the input circuit and no impairment of tuned circuit selectivity.

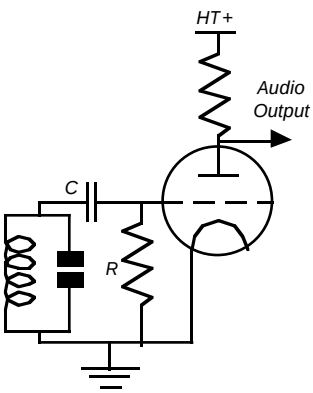

Figure 9

In both leaky grid and anode bend detectors the programme signal appears at the triode grid; and by the usual amplification action a larger version of the programme signal is developed at the anode. The valve thus acts as both detector and amplifier and in this respect is superior to a diode detector. But there is a snag in that the triode acting as a detector is not biased so as to work on the straight line portion of its characteristic and therefore produces appreciable distortion as an amplifier. Because of this a diode detector was always used in later superhet receivers of the 1930s, often followed by a separate triode suitably biased as an amplifier. Although the amplifier triode was electrically separate, it was usually included with the diode in a common glass envelope as a 'double diode triode' valve, a second diode being provided for automatic volume control which will be dealt with in a later article.

PART 8

The Triode as an Oscillator

A very useful feature of a triode is its ability to act as an oscillator. Continuous sinewave oscillations are needed to form the carrier wave in a broadcast transmitter; and as the local oscillations in a superhet receiver, which we shall come to in a later article.

Figure 10a shows a triode oscillator circuit and we can see that a coil and a capacitor are connected between the grid and cathode, these forming a tuned circuit which determines the frequency of the oscillation.

The operation of the oscillator is as follows. Any small random voltage disturbance at the grid produces corresponding variations in the anode current. The current flows through the coil F which is wound close to the tuned circuit coil L and induces voltage variations in L by transformer action. The coil F is wound in such a direction that the induced voltage variations in L are in the same polarity as the original grid voltage disturbance which started it all off. Saying that they are "the same polarity" means that if the original grid voltage variation is positive-going, then the voltage induced in L from the feedback coil F is also positive-going: so the induced voltage fed back from the anode to the grid tuned circuit adds to the original grid voltage and makes it larger. The same thing of course applies to negative-going disturbances at the grid. Since the anode current variations induce voltages adding to the original grid disturbances, the process is known as positive feedback.

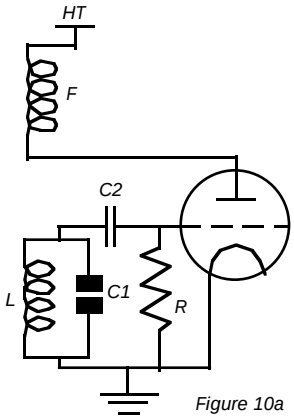

Figure 10a

This positive feedback process repeats and the grid voltage and anode current variations get larger and larger: the voltage variations induced back to the grid 'kick' the tuned circuit L/C1 into oscillation at its resonant frequency and the eventual result is that continuous oscillations at this frequency are generated.

You will notice the capacitor C2 feeding the valve grid, and the 'grid leak' R down to the cathode. Consider first what happens if these are omitted and the grid is connected directly to the coil L. As the oscillating voltage at the grid gets larger and larger, the grid will be driven strongly positive with respect to the cathode on the positive peaks of the oscillations and quite a lot of grid current will flow. This grid current will load the tuned circuit with the result that the positive peaks of oscillation will be reduced and the waveform of the oscillations will be distorted.

To preserve a reasonably pure sine wave shape we now include the capacitor C2 and grid leak R which behave in the same way as the corresponding components in the leaky grid detector described in a previous article. The tips of the positive peaks will turn on just a little grid current and charge the right hand plate of the capacitor C2 negatively. This negative bias on the grid will prevent grid current flowing except on the extreme tips of the oscillations and the oscillation waveform will be very little distorted. So C2 and R act as an automatic control to prevent the oscillations getting so large as to be beyond the capabilities of the valve to handle without significant distortion.

Reaction

The positive feedback process as described above can be usefully used to increase the sensitivity of a triode valve detector, an arrangement often used in the 1920's and known as 'reaction' (or 'regeneration' in America).

In Figure 10b the circuit is very similar to Figure 10a, except that the HT is fed to the anode through a load resistor and the feedback coil F is fed through a variable capacitor. The valve here is the detector in a receiver and, apart from coil F etc, the circuit is the same as that of Figure 9 in the previous article in this series.

Figure 10b

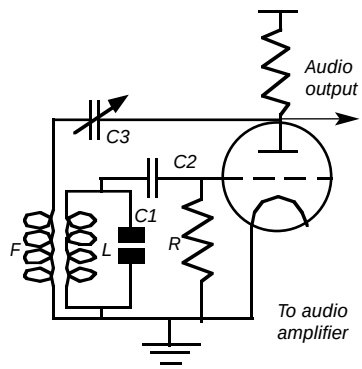

The radio frequency goes through the variable capacitor C3 and through the feedback coil F to earth. The positive feedback effect boosts up the signal at the grid in the same way as it did in the oscillator, but the amount of feedback is controlled by C3 (the reaction control) so that the circuit almost oscillates but not quite. Nevertheless the signal at the grid is boosted so that the overall amplification of the detector is much increased.

An associated advantage is that the signal boost occurs only round about the frequency of the tuned circuit. Incoming signals on other frequencies are not boosted, so the 'selectivity' of the receiver is improved; that is, the station to which the receiver is tuned comes through strongly, while other stations on nearby frequencies remain relatively weak and do not interfere.

Emergency amendment to the constitution to permit a postal ballot

According to the present constitution the election of the Officers and Ordinary Members of the BVWS Committee is held by a show of hands at the Annual General Meeting. One of our priorities is a thorough review of the Society's constitution. In the meantime, it was recommended in the April Bulletin (vol 20, no 2, p. 19) that in future elections should be held by postal ballot as this would be fairer for our geographically dispersed membership. In response the Committee have at their meeting of 8th August proposed to pass a temporary by-law to empower us to hold a postal ballot (the details of this meeting will be published in the next issue of the Bulletin).

It is recommended that in order to save expenses, the ballot will be organised internally with co-opted scrutineers. The results will be decided by a simple majority of those voting. In the October issue of the Bulletin will be enclosed a call for nominations. The lists of candidates will be enclosed in the December issue, and the results will be announced at the Annual General Meeting which the Committee proposes should be at the first Harpenden meeting of the New Year to be held on 25th February 1996. Members are invited to express their opinion about these arrangements to the Committee.

Willem Hackman

Pye Black Box

At school in the 1940's and early 50's I was always messing about with electronics. Crystal sets etc. were my forte.

My parents had a 1934 McMichael transportable and on my portable HMV wind-up I purchased and fitted a tone arm, then using a jack plug wired it through the radio.

Not satisfied, when I left school with the wind-up I wanted a proper record player as 45rpm discs were coming into fashion. I was working for an ex RAF radio man in his sales and service store when I came across a Pye Black Box. This is for me I thought, but the price was inhibitive.

After much pleading with my mother I managed to get her to buy me a McMichael record player at 11 Guineas. The Black Box was just out of reach, although I swore I would get one.

I left the shop, joined the navy in the Fleet Air Arm and took my McMichael wherever I went, I constructed a small receiver and fitted it in the record player, germanium diode etc. Over the years this travelled with me all over the world. On medical discharge from the FAA I emigrated to Australia, taking the McMichael with me. I still yearned for my Black Box (the black one that is). On return to the UK in the 1970's I started collecting radios from the 20's to the late 50's and in 1993 I heard of the availability of a Black Box. On further contact the shop had three brown, but only one black one. I leapt in and purchased the lot, they were probably over priced but I didn't care as my dream was reaching fruition.

Two other record players were used to restore the black one and one brown one (later sold). At last I had an original Black Box in good condition. It had the original auto changer in working order. My dream after forty years had been realised.

My next move was to get a McMichael transportable for sentimental reasons: after all I had grown up listening to Radio Luxemburg on that model. In 1994 I realised that dream, although on inspection it was apparent the McMichael had been restored, not as an original as it now had a metal rectifier.

I also have a 1920's radio with a Fallon tuning condenser, found in a garage in Norwich. It even had the original batteries inside and is now working well.

My desire for the Pye Black Box never lessened and although it took 40 years I finally made it.

John Wickham

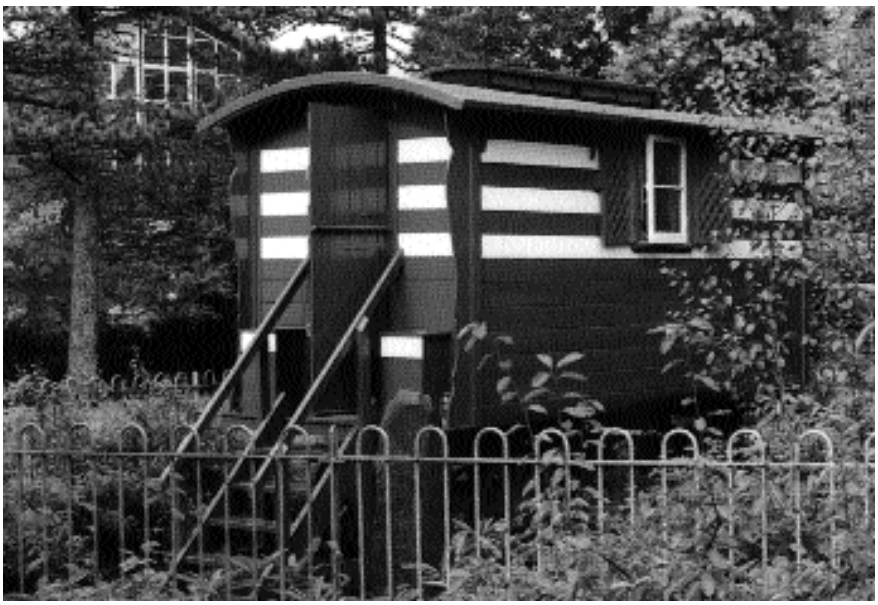

Romany remembered

BVWS member John Thorpe has been researching the life and work of the Rev. G. Bramwell Evens, better known as the broadcaster Romany of the BBC'. He entertained millions with his 'out with Romany' radio broadcasts during the 1930's and 40's. John has been fortunate enough to gather a good deal of information from a wide variety of sources, but is all too aware that there is probably a huge amount of uncollated material from within the membership of the BVWS. If you have any memorabilia and / or reminiscences on 'Romany of the BBC' please send them to: John Thorpe, 46 Andrew Street, Bury, Lancs, BL9 7HB.

'Romany's' caravan ('vardo' in Romany language) has been preserved by Macclesfield Borough Council and can be found in South Drive, Wilmslow, Lancashire. It is open for viewing on the second saturday of each month from May to September, from 12 - 3pm.

John is also involved in helping to restart the Romany Society later this year, which ran from 1946 until the mid 1960's, its purpose being to remember and know the man and his work.

Reminiscences of a Murphy A4

The home-made O-V-1 that remained in place from the time of my father's death in the early thirties ran off a long wire suspended from a bean pole near the chicken run. There was an elimininator but the accumulators only ran for three weeks or so and as the war clouds gathered it was thought wise to install an all- mains, so a Murphy A4 (second hand) came to live with us and this faithful member of the family would run off a curtain rail. It had a gram socket for the Garrard pick-up and turntable, with only a new rectifier and electrolytics served throughout the second world war. The comparison between its finely veneered cabinet, wonderfully engineered chassis and the junk on sale today is something to remember. Eventually it went to the breakers yard but it was just one of the memorable Welwyn Garden City marque that will long be held in the highest esteem.

Peter Robinson

Notes on Piano-Keys *Restoring AM/FM receivers*

By John Ounsted

1955 , and the sun was already setting on the British radio industry. As it was then configured, it had really only ten years to live, before widespread slump, and consequent mergers and closures, (not to mention the long, grim Oriental invasion), had decimated it. Who would have guessed, looking at the confident new “fridge” - type B-U-S-H badge of the late fifties, that, in only fifteen years time, it would be adorning Japanese-assembled cassette recorders, or worse, that in thirty or so years, its most widespread use would be as a logo on videotapes?

The valve mains table receivers of, say, 1955-62 now seem a poignant last gasp. No-one could have known it at the time, but when the engineers and stylists convened to create the new AM/FM sets of 1955 on, they were creating the last full sized, stand alone receivers. When they bowed out, under the pressure of imports, the radio, as an entity, became tiny, shiny, tinny and frivolous. Television usurped its privileged position in the home, and radio became henceforth a portable and automotive medium.

Forty years ago, the British setmakers were all just launching their new VHF models, offering high fidelity reception of the BBCs existing Home, Light and Third Programmes. These radios, though technically innovative, were visually rather nondescript - there was nothing about them that indicated their new capabilities. Indeed, many of them resembled their immediate predecessors - the old-meat-and-potatoes five-valve, four knob, three-waveband sets of the early fifties, which had collectively got stuck in something of a rut. There was a clear need for a new look-a style that would be accepted as the look for the modern British radio.

Looking across the water to Europe, British manufacturers observed (perhaps rather disconcertedly) that foreigners had already solved the problem for them, for Phillips, Grundig and Braun, to name but three, were already making, and exporting, the brilliant new “piano-key” radios.

The “piano-key” style became classic, almost iconic, as more and more English manufacturers gratefully accepted it for their premier table models.

Its principle features may be sketched as follows: almost invariably, the receiver was oversquare and symmetrical about a vertical centre line, and it usually featured a pair of double control knobs that flanked a long horizontal tuning scale, (Thus far, it somewhat resembled the new multi

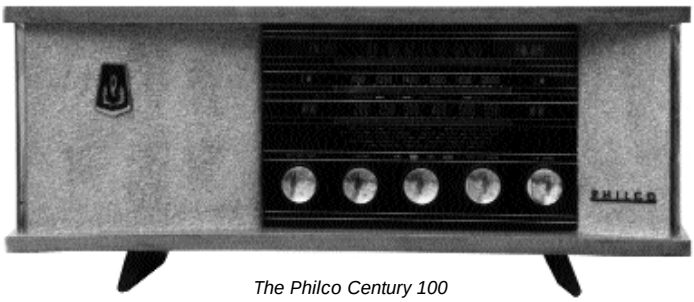

The Philco Century 100

channel TV sets of the time, which also settled , with astonishing stylistic consistency, on the balanced two-double-knobs look). Beneath the tuning scale was a row of square buttons, ivory or white in colour, which usually selected wavebands and switched the set on and off. In many receivers, even the left-to-right order of these was the same :OFF-(GRAM)-LW-MW-(SW)-VHF. The more exotic imported radios used additional “keys” to control the tone, or select different aerials. A tuning indicator was often provided, shining its expanding emerald triangle through a masked aperture in the tuning scale. Some manufacturers moved this indicator elsewhere, to make a more striking visual feature of it, often presenting it behind a tapered or shield-shaped escutcheon on the upper right-hand-side of the speaker cloth, and lending the receiver a faintly baronial air. A gaudy script-type maker’s name badge would sometimes be included, twirling its way uphill on the left-hand-side, and suggestive more of a juke box !

The set was almost always trimmed in gold, including spun gold inserts for the knobs, and a gilded metal bar was commonly used to separate the tuning scale from the speaker cloth above.

In the second half of the fifties, the following British makes all tried their hands at “piano-key” sets: Bush, Champion, Ferguson/HMV, KB, Murphy, Masteradio/McMichael, Pye/Invicta, Regentone and RGD. Others adopted most of the key features (sorry) mentioned above, but distrusted the piano-key switchbanks, preferring to retain conventional rotary band selection, (Cossor, Ekco, GEC).

This article explores the electrical restoration of these likeable old radios, many of which, (and particularly the so-called “3D” sets) are capable of excellent FM performance when correctly set up. To avoid

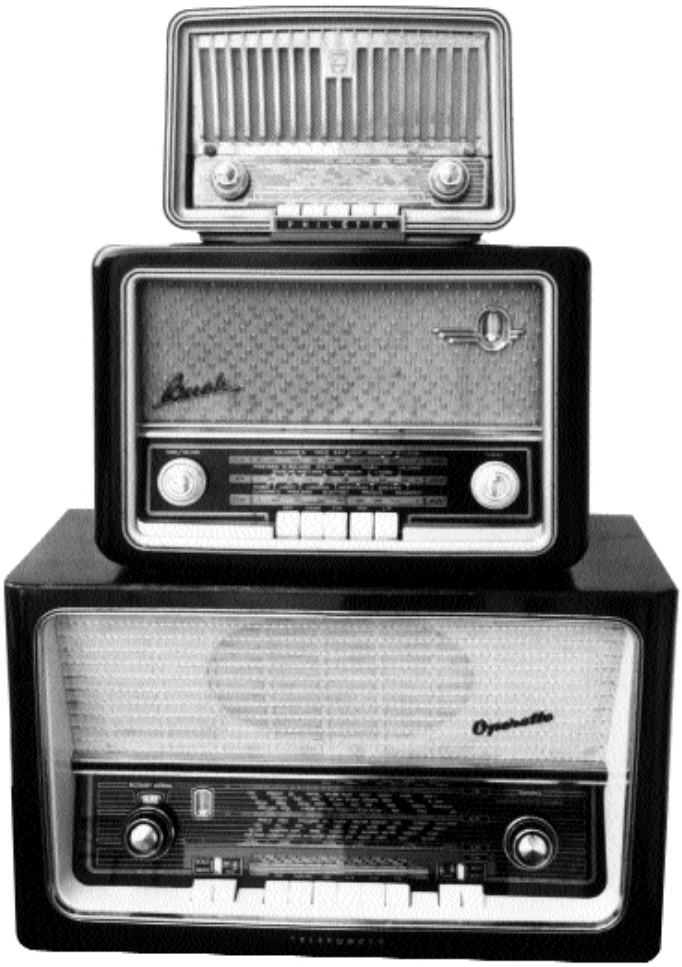

Top to bottom: Philetta BD 273U, Bush VHF 61 and Telefunken Operette 8

repetition of previous articles on restoration, I have concentrated on details especially pertinent to these AM/FM radios, and have assumed that the reader is experienced in AM-only receivers. Most of the following is also applicable to non-”piano-key” sets of course !

To business then ; Most manufacturers settled on a six-valve line-up :

1 **E/UCC85**: 1st triode: RF Amp. (FM only)
2nd triode: Mixer/osc. (FM only)

2 **E/UCH81**: Triode: Osc. (AM only).
Hexode: Mixer (AM), 1st IF Amp. (FM).

3 **E/UF89**: IF Amp (AM), 2nd IF Amp. (& possibly Limiter) (FM).

4 **E/UABC80**: 2 diodes: Ratio detector (FM only). 3rd diode: detector (AM only)
Triode : AF Amp.

5 **E/UL84**: Output Pentode.

6 **EZ80/UY85**: Rectifier.

7 **E/UM80/1**: Tuning indicator, if fitted).

Some makes used a pair of RF pentodes in the FM front-end (early Bush and GEC, some Philips), or a triode-pentode of the ECF80/2 type, (early Ferguson).

Some makes used the otherwise redundant AM osc. triode as an additional AF amplifier on FM, following the ratio detector, (early Bush and Pye)

Moving to the IF strip, some sets fitted an EF85 (early Pye and Philips) some an additional EF89, (Bush), sometimes operative only on FM, (Braun), and permitting the last IF valve to act as a limiter on FM only.

Occasionally, a Foster-Seeley discriminator was fitted, (Pye Fenman II, some Ferguson), with which a preceding limiter stage was mandatory. As the sixties came in, the valve radio chassis found its final refuge in stereo radiogram guise. Here, the E/UABC80 was often dropped in favour of semiconductor diode ratio-detectors and separate triode-pentodes in the AF stages.

Some weirdo variations on the basic theme also exist : Pye produced a small four-valve (including rectifier) AM/FM radio which used all its valves on both systems. Its plain-Jane appearance belied its technical bravura : it used merely an ECC85, an EBF89 and an ECL82, (with a pair of crystal diodes as a ratio detector), in an eccentric but quite effective reflex circuit, wherein one of the front-end triodes did double duty on FM as both an RF and an IF amplifier. Despite quite promising results, (see later), neither Pye nor other makers continued with this type of circuit. Pity !

Rather less exotically, Kolster Brandes flirted with an astonishing number of FM tuner and AM frequency-changer combinations, without really settling on a common circuit: some sets had a fairly sensible ECC81, arranged like an '85, as a grounded-grid VHF RF Amp., and self-oscillating mixer.....

others had a TV-style cascode ECC84 as RF Amp., with an outboard 6BW7 as mixer. The AM front-end could be the familiar "toaster" style 6BE6 heptode circuit, which was persuaded to work (well, sort of, see later) as a straight 10.7 MHz IF Amp. on FM..... or, it might be a 12AH8 or ECH81 triode-hexode, or even an ECF82 triode-pentode..... Murphy's sets were almost as unconventional, as one has come to expect from this make : one chassis avoided using any of the "E/U 80 " valves mentioned above, by using two individual single-triode valves in the FM front end, and an EB91, (or perhaps I should say 6D2) as a ratio-detector, hence enabling the use of an all-Mazda line-up. As the years wore on, and the Rank merger loomed, Murphy gradually adopted Mazda-badged equivalents of the "E/U 80's ".

Despite all these possible variations, your average common or garden receiver (fortunately!) adheres to the six-valve line-up discussed above.

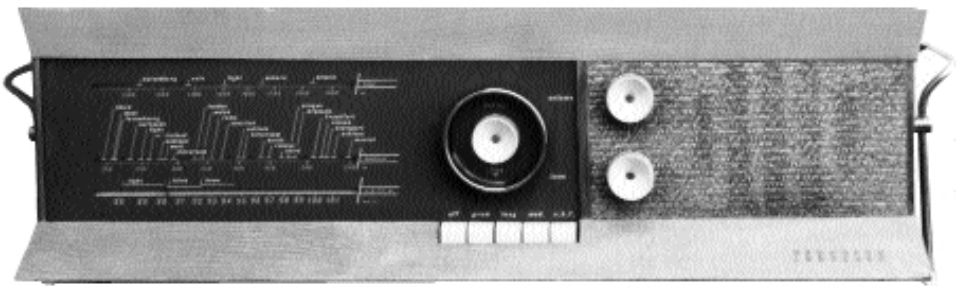

The Long Low Look: The Ferguson Futura 388A

Restoration

It is important that the set's audio performance is fully up to scratch before listening critically for possible RF, IF, or Ratio-detector faults. It is also wise to restore the receiver's AM performance before tackling the FM side, since component faults are easier to diagnose on AM , and putting them to rights may improve the FM performance as well. Hence, the following plan is recommended :

(i). Restore power supply and AF stages.

(ii). Restore AM performance.

(iii). Restore FM performance.

(i). Power Supply and AF stages

The restoration guides given in back numbers of the BVWS bulletin dealing with conventional AM only sets are generally applicable. To summarise : remove or renew mains filter capacitors : check rectifier for low emission or internal arcing and replace if necessary : check for o/c or leakage, noting that some receivers (early Bush and Pye, Orion) have two AF triodes in circuit on FM : check for o/c's, and occasional s/c's in cathode decoupling electrolytics : check that triode anode load resistor has not gone "high" : check value of pentode cathode resistor: check for any signs of overheating in the output stage, and for any standing voltage on the grid of the output valve. This last may be caused by a leak in the coupling capacitor, and may (hopefully) be cured by its replacement. Unfortunately, on these chassis, one often finds that this isn't fully the case : a positive voltage persists on the grid, indicating a common fault that "miniature" output pentodes are prone to grid emission. In this condition, the valves grid acquires cathode-like emissive properties, which may only be activated after the valve has fully warmed up, say after ten minutes or so. The grid leak then acts as a makeshift bias resistor for this sham "cathode", and, being of high value, develops a considerable positive voltage across itself and runs the whole valve hotter. The process hence becomes regenerative, since the hotter grid emits more and more electrons, and becomes more and more positive.

Pye corner: the quirky Pye Piper P117 and the staid Fenman 1

In bad cases, the audio will degenerate into complete unintelligibility, if the fault is allowed to run its full course. Other audible symptoms include a large and mysterious increase in the valve's microphony, resulting in "pinging" noises, (especially in small AC/DC sets.), triggered by whatever audio transients are still fighting their way through the speaker. Increased background hum is another symptom, even in mild, non-malignant cases.

The fault may have repercussions: if grossly excessive current is being passed by the output valve, its cathode components, the primary of the output transformer , and any HT feed resistors, are all vulnerable. The unexpected high current drain may also pull down the HT voltage alarmingly.

Grid emission may arise spontaneously in a valve, with the UL84, UCL82 and UCL83 being prime offenders, or it may be initially provoked by leaky capacitors to its grid. It pays to check, with a VVM or DVM , that no substantial positive voltage exists at the grid of the output valve after ten minutes or so from a "cold start". Anything more than, say half a volt there should be viewed with suspicion. The only cure, of course, replacement of the valve.

Another common problem with all-glass valves is "crackly" oxidised valve pins. These must be cleaned with switch cleaner or non-graphited light oil prior to any service or alignment work.

When you are confident that the AF stages are working correctly, an AF signal of known good quality may be injected in to the "gram" sockets to assess the audio quality. This must be satisfactory before proceeding with further restoration.

(ii) AM Performance Restoration

Again, previous articles detailing fault-finding in AM-only receivers are applicable, with the following words of caution:

(a). The valves in these radios are not into the same class as their pre-war counterparts. A non technically-minded friend will peer dubiously at a thirties set before (inevitably) asking, "can you still get the valves for these old radios?" and your (largely correct) boast is "Ah, but you don't

continues next page

need to change them!" Unfortunately, this is not the case with these more recent radios, where a substantial loss of emission (even in oscillator triodes or detector diodes) is not uncommon.

Starting from the front end, a low-emission FC valve hexode will produce generally weak and possibly noisy results on all stations. A very low oscillator triode will fail to oscillate, usually first on LW, producing no output at all. This may spread to MW as the valve warms up, causing stations to become intermittent, or displaced on the dial, before disappearing altogether.

A low IF valve will also produce generally weak results. This can best be assessed on the French LW stations. The E/UF89 and E/UBF89 are common offenders here, often down to one quarter of their specified mutual conductance.

Both FC and IF valves can occasionally suffer from grid emission, which as discussed above, can put a positive voltage on their grids. The symptoms will be a radical loss of gain, once again often only evident after the set has fully warmed up. Inter-electrode shorts also (rarely) occur, causing smoking resistors and grossly incorrect electrode voltages.

A very low emission detector diode in a E/UABC80 or E/UBF89 may also be the cause of poor results, fading further with time. Weak stations may then be totally suppressed, an eerie silence pervading the high medium-wavelengths, reminiscent of a thirties set with "silent tuning". If the emission fails totally, there will be no output at all of course.

Latter-day keys: the wondrous reverberating stereophonic Philips BZX44A - a late entry from 1964

(b). These sets almost invariably use a Ferrite-rod for MW/LW reception.
When aligning, "padding" is normally achieved by loosening the wax, pitch, or paint holding the coil formers in place and moving them along the rod, seeking best results on the high-wavelength end of the band. "Trimming" is done by adjusting a conventional trimmer cap. across the coil, seeking best results on the low wavelengths. If however, the coils are very solidly stuck to the rod, and you wish to test if they are already "in tune", an additional piece of ferrite rod, obtained from a scrap set, may be held end-to-end with the existing rod, to increase the coil's inductance. Conversely, a small single shorted wire loop brought near will decrease it. The received signal strength should decrease when both these items are advanced, indicating that the coil is resonant. Beware "hand" effects when doing these tests; it's best to mount the scrap rod and single-turn on each end of an electrically-neutral rod, (an old Biro would do), hence producing a "tuning-wand".

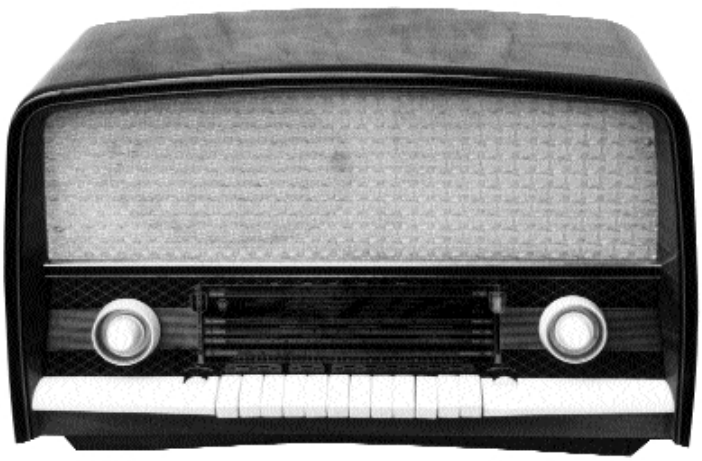

The Orion AR 612

(c.) NEVER force any dust-iron or ferrite core. If a core is stuck, apply a small "tear" of WD40 or similar, having cleared any wax away. leave for about a quarter of an hour. If still stuck, apply gentle heat from a hairdryer (not a hot air stripper), and then apply another "tear" of lubricant. When the core is finally freed, note the "feel" of rotation. If there is an alarming increase in effort required to turn it as the core is screwed in, it is best to gently unscrew the slug totally from the former and clean its thread with some WD40 and an old soft toothbrush. This should restore smoothness.

Trimmer capacitors may be sealed with paint, but coil-cores must be sealed with wax, or a reputable core-locking compound. If paint is used, and it percolates several threads deep, it may dry so hard that the core will be broken the next time an attempt is made to turn it. If the latter unthinkable scenario has occurred, and the core has jammed in an "off-tune" position, the author does not recommend trying to drill it out, unless the coil former is of robust construction and readily removable from the set. The best ploy is to leave the core where it is and to screw in an additional short core of dust-iron or brass to respectively increase or decrease the coil inductance. It may be possible, if the core is not far from the correct setting, to increase or decrease the value of an associated series or parallel capacitor to regain resonance.

(d.) When you have finished any AM IF alignment that may be necessary, (using a signal generator I hope!), the AM cores should be sealed and pieces of plasticine or similar temporarily placed over their apertures to prevent them mistakenly (but oh-so-easily!) disturbed during any FM alignment. the IF cans may also be labelled with helpful annotations to aid alignment, as can RF adjustments.

(iii) FM Performance Restoration.

Good, so we now have the receiver running well on AM. Switching to FM may still yield poor results, with perhaps low sensitivity and/or scratchy rasping distortion . Check first that the aerial is adequate before condemning the radio.
Most British receivers required a 75 Ohm balanced input for best results. The internal aerials provided in most fifties sets are much shorter than the 5ft. or so needed for a half-wave dipole resonant at the centre of Band II. These shortened "condensed" dipoles are shunted centrally by a four or five turn "loading coil" to tune them to around 95Mhz. (Incidentally, this coil may be judiciously "tweaked" for best results, by manually stretching or compressing its turns, when finally setting up the receiver, if the internal aerial is deemed adequate).

A definite improvement over the reception possible with internal aerial may be had constructing a simple dipole, using a piece of opened-out mains twin flex attached, in tension, to a slim wooden dowel, about 5 feet long. Move this around the room, seeking best results. If reception is still poor, then it is likely that the receiver is indeed faulty, especially if reception is usually good in your area. the following table should then be consulted. It assumes full operation on AM.

Set completely dead on FM.
1. Low-emission front-end LO valve.
2. Faulty switching of signal or HT on wavechange switching.
3. O/c FM IFT or coilpack switched out of circuit on AM.

All stations strongly received but distorted.
1.Unbalanced emission of ratio-detector diodes.
2. Slight ratio-detector misalignment.

Some local stations strongly received but distorted. Others OK.
Multipath distortion-try moving or increasing directivity of aerial.

Local stations weak but undistorted. Distant stations distorted.
1. Low-emission IF, or front-end valves.
2. Misaligned IF transformer(s).

All stations weak and distorted.
1. Major ratio-detector misalignment.
2. Major alignment drift in all stages, particularly in small, hot AC/DC sets.

Modulation hum audible on local stations.
1. Poorly-sited aerial, or wrong type in use. Try a folded dipole if receiver requires it, e.g. Philips. Connect reliable earth to earth socket, if fitted.
2. Grid-emission, or h-to-k leakage in front-end, IF, or ratio-detector valve.

Undistorted results only obtained with set tuned "either side" of centre of station, or away from maximum indicated on tuning indicator.
1. O/c stabilising electrolytic capacitor on ratio-detector, usually 2-5uf connected positive to chassis.
2. General misalignment.

For satisfactory reception, the ratio-detector's IF input must have minimal variations in its amplitude as its frequency swings with the programme material. To this end, limiting is often provided in the final IF amp., which provides a "flat-topped" frequency response, centred on the receiver's intermediate frequency, for input signals exceeding a certain amplitude. As the input is reduced, it becomes insufficient to saturate the limiter, and unwanted amplitude variations may unavoidably be fed to the ratio-detector. These may be caused by slight asymmetry in the IF or RF stages of the radio, or by reception anomalies, like multipath "ghosts".

The spurious AM will be heard as "scratchy" unpleasant distortion, and may be far worse on loud passages, where FM deviation is maximum. It follows, therefore that the set's gain must be optimised to promote good limiting if undistorted weak-station reception is required, and that low-emission IF valves, or misaligned IFT's will compromise performance.

In some radios, the ratio-detector's "slope", i.e. its change of output voltage for a given input frequency swing, is only high, (and linear) when it is in tune. Mistuning here, (or unbalanced diodes) may hence cause not just distortion, but also greatly reduced output level.

This brings us on to our next topic- realignment. This must only be contemplated if all other likely faults have been checked. At the very least, an accurately calibrated drift-free oscillator is required, running at the receiver's IF, usually 10.7Mhz: the output level must be continuously variable over at least 50dB's. The author uses a valve signal generator with an inexpensive modern frequency counter to monitor it. It is also desirable to consult the WET service sheet, or the appropriate section of NEWNES radio and TV servicing, for the full alignment procedure, since this differs from model to model. Some manufacturers, (like PYE) demanded the use of FM generators ("wobbulators"), to trim the overall IF shape. In practice, however, the following procedure using an unmodulated genny, should be satisfactory for most chassis fitted with ratio-detectors:

1). Switch set and generator on 15 mins. before work.
2). Disconnect aerial input to set and tune it to a dead spot in band.
3). Connect generator, via isolation capacitors if necessary, to grid of final IF valve. Connect multimeter or DVM across ratio-detector stabilising capacitor, positive to chassis. Adjust generator level to produce about 5v indication. During all subsequent alignment, readjust generator level to maintain about 5v indication, progressively reducing input as more stages are brought into circuit and IFT's are tuned.
4). Adjust primary of final FM IFT for maximum indication.
5). Transfer generator to grid of previous valve IF strip. Adjust secondary, then primary, of the FM IFT in the anode circuit of this valve, for maximum indication. Beware of instability, evidenced by a substantial indication with the generator switched off! If this occurs, ensure the leads are screened, and as short as possible. Dress them well clear of the final IF can.
6). Repeat 5. for the previous IF valve, if fitted.
7). To adjust the VHF tuner's output IFT, wind about 4 turns of insulated wire around the tuner valve, (or RF amp. valve, in two-valve tuners). The signal is injected into this loop, and the secondary, then the primary, of the IFT, are adjusted for maximum output.
8).To adjust the ratio-detector, connect multimeter on 50uA range, or DVM, as shown below, using a pair of accurately matched 47K resistors. With signal applied as in 7 adjust secondary of final IFT for exactly zero reading on the meter. Observe that, as the secondary is tuned, the meter starts at a low positive reading, rises to a peak, then falls through zero to a negative peak, then rises to a low negative reading. Balance is indicated at zero current.

Note that the procedure is slightly different on receivers that have balanced ratio-detectors, (McCarthy, early Murphy). Here, the meter is connected between chassis and point "Y", but, otherwise, the procedure is the same.
9).Finally, check the symmetry of the IF response by reconnecting the meter as in 3 and swinging the generator either side of the IF. The maximum output voltage should be obtained at the set's intermediate frequency, or within +/- 0.03Mhz of it, and be symmetrically disposed about it. If it is not, the IF alignment must be repeated.

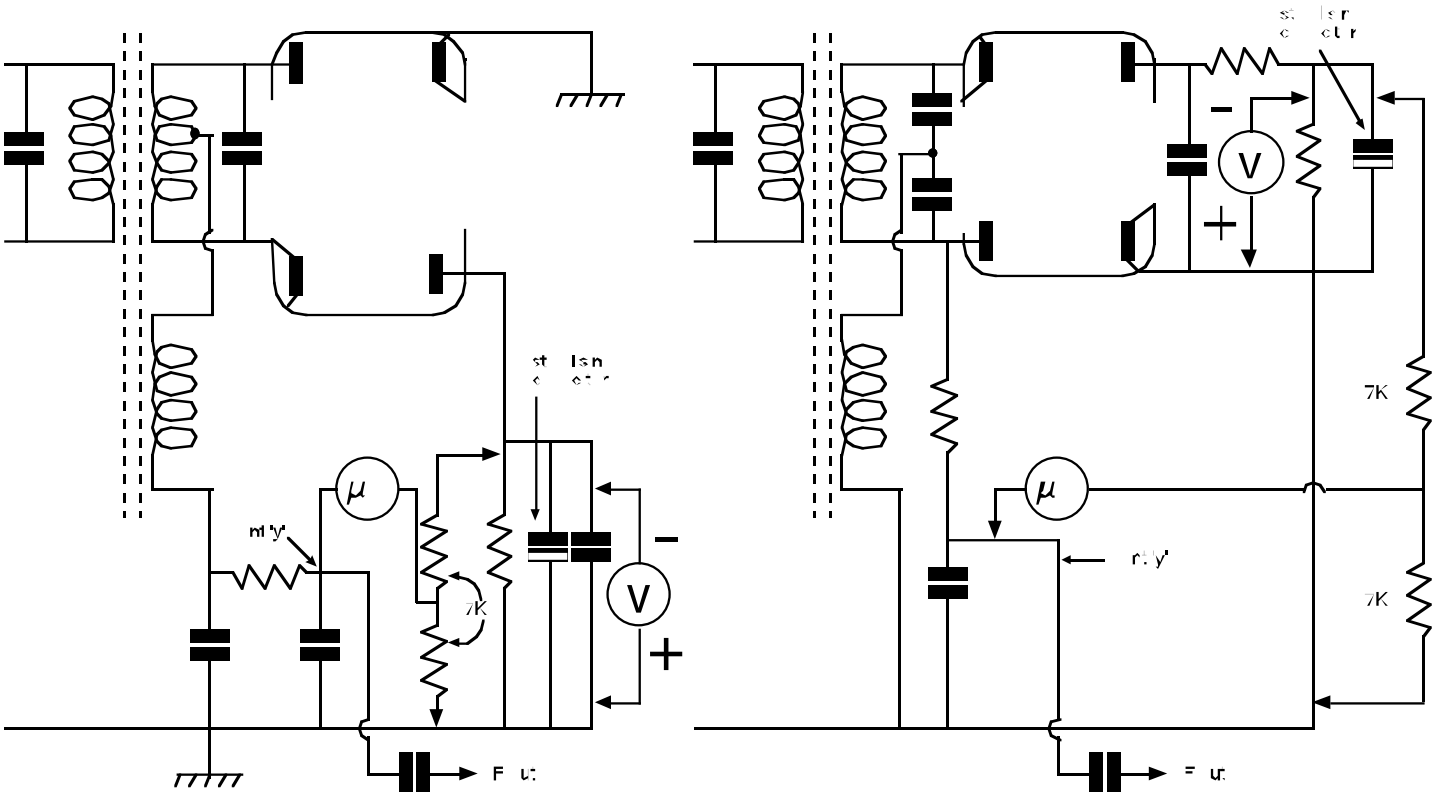

Connections to Ratio Detector
The voltmeter shows the IF signal, and its reading must be maximised (paras 3 to 7). The microammeter indicates Ratio Detector balance at zero current reading

Front end alignment

Many different designs of front-end may be encountered, each with its own alignment procedure, depending on whether it is capacitively or permeability tuned, and whether or not it incorporates oscillator re-radiation balance trimmers. For this reason, it is impossible to give hard-and-fast rules for front-end alignment, and the reader is advised to consult the appropriate WET service sheet, or NEWNES radio and TV servicing. Front-end misalignment is not uncommon, and if uncorrected, will compromise the set's performance.

continues next page

Awkward Customers

Suppose you have carried out all the above tests and adjustments, and your ungrateful receiver is still unsatisfactory on FM. What to do? Here are some more suggestions:

1). If reception is still weak and/or distorted, consider further aerial improvements. try using an aerial with gain, e.g. a multi element Yagi. Move it out of doors, well clear of metal objects, and feed it into the radio with the appropriate impedance feeder.

2). If the IF gain seems low, and all associated components check normal, don't overlook the possibility of mould on the IFT windings, or changed-valve shunt capacitors. Both are easily checked after opening the IFT cans.

3). When it's difficult to pin-point whether a fault lies in the front-end or the IF strip, try feeding the front-end of a second, known-good receiver, (preferably the same make.) into the IF strip of the faulty set. If results decisively improve, this suggests that the faulty receiver's front-end is defective, rather than its IF strip.

4). If trouble is experienced with the emblematic piano-key switch banks themselves, and they don't respond to normal cleaning, check to see if there are any usable spare contacts on the bank, which can be used in place of the defective ones. Alternatively, the "Gram" button might be rewired in place of the faulty one.

5). Drift: All these sets suffer from short term drift from cold, hence the frequent provision of a tuning indicator. It must not be regarded as a fault. After about 5 minutes, further drift should be negligible.

6). Don't be too critical! Without naming names, not everything transmitted today is of "reference" quality. A good "3D" set will easily show up heavy-handed studio compression of loud music, not to mention the copious tape-hiss so often a feature of documentary programmes.

The sets themselves-What to expect.

There are distinct family resemblances between the circuits of many receivers of the same make and vintage. Hence, experience with one model may be useful when servicing another. To finish, then, here are the author's thoughts and findings on a representative group of radios, some good, some bad:

Braun Super RC 61/99 UKW

Excellent 3D performance on FM. Good sensitivity, FM limiting, and sound.Continuously variable Bass and Treble tone controls work well. AM quality poor however, with large sideband restriction. Only a few capacitor replacements needed to get it back on the road. Set worked on FM without realignment. Recommended.

Bush VHF 61

Good looking future classic that maintained solid Bush build quality right up to 1960. Let down somewhat by their love affair with waxed paper caps. Good performance on FM when first acquired, although both IF valves required renewal. Mediocre performance on AM, especially in view of the two valve IF strip. Good sound, thanks to Celestion speaker. Recommended.

EKCO A274

Big, square, austere looking FM only two speaker radio, with good sensitivity and sound. Not much wrong with it as received.

Ferguson 384U

Routine late 1950's piano key set is, at least, built on metal chassis, unlike later offerings from this company. Audio performance compromised by poor speaker. Way out of alignment on initial testing. extensive re-valving needed to restore acceptable original RF performance. Not really recommended.

Grundig 97

The Kolster Brandes MR10

This small German P-K receiver is AC only, which keeps it acceptably cool. Small high flux speaker gives nice big sound on FM. Sidebands cut on AM, But sensitivity good on both systems. Crowded below decks, and many horrendously leaky capacitors required renewal. Styling doesn't quite hit the mark.

Kolster-Brandes MR10

looks quite nice in white Bakelite case, but troublesome, even on AM. Lots of leaky wax capacitors, oxidised IFT windings etc. Big aerial may be required, to compensate for poor FM sensitivity. Disappointing Goodmans speaker doesn't help. Complete realignment needed on examples author has seen. the procedure for this is tricky, since IF gain given by AM front end seems less than on rival sets, hence remarks earlier. Generally poor build standard. Not recommended.

Orion AR 612 (curved top version)

Glorious, giant sized, four speaker German 3D set, measures 26.5" x 16.25" x 10.25". Very impressive, if slightly sibilant, reception on FM. Reasonable performance on LW, MW, and two short wave bands, with unusual fine tuning arrangement on SW. Separate continuously variable treble and bass controls, actuated by one of the three tone control keys. Troublesome printed circuit wavechange switches and the prevalence of heavily leaky capacitors in the AF stages are its only drawbacks. Its looks alone are enough to recommend it.

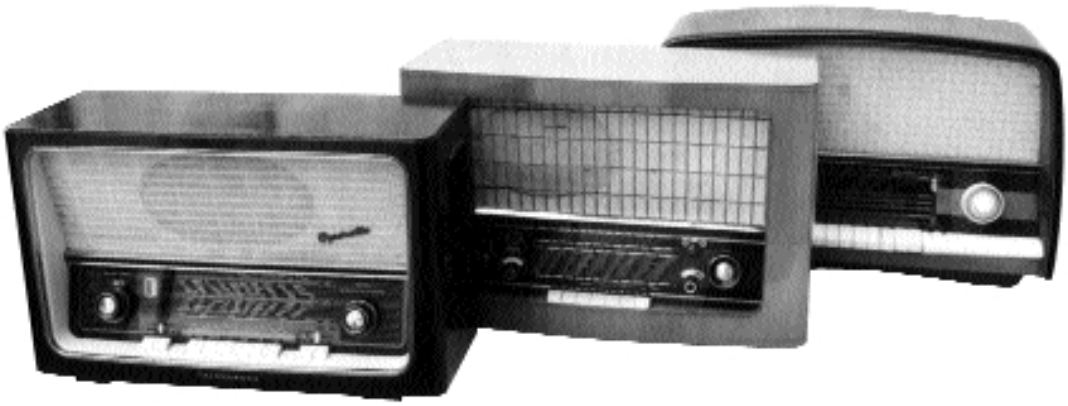

Three in 3d: Telefunken Operette 8, Braun Super RC61 / 99UKW and Orion AR 612

PYE Fenman I

Early non-piano key AM/FM receiver. Disappointing styling, especially after the beautiful "Cambridge International" of the early fifties. FM sensitivity good. Receiver maintains its alignment well. Goodmans speaker again poor.

PYE P117. "Fm/Am Piper"

This is the radio, mentioned in the introduction, that uses a reflex arrangement on FM to economise on valves. Its AM performance is acceptable up to its rivals, whilst on FM, there's a greater tendency toward multipath distortion, compared to standard sets, demanding more critical aerial positioning. Technically interesting, the set is let down by Dullsville styling.

Philips 273U "Philetta"

Tiny 7" x 11" x 6.5" P-K set (with "sunburst" lit front) has four wavebands, excellent AM and FM sensitivity, and an incredibly big "voice" for such a small set. Again, crowded below chassis, with lots of dodgy capacitors to change. large temperature cycles had caused extensive drift on the author's example, necessitating complete re-trimming. In view of this, it was thought prudent to change to diode heater dropping, TV style, to keep the heat down, none the less recommended - A little cracker.

Philips G64A

Standard ubiquitous piano key set in (rather flimsy) wooden case. many variants exist. As with the previous entry, Philips "Super L technique", applied to their coil packs, did indeed yield superior gain figures to those of their rivals (such as Bush). Only problem on this set is that, because of good Treble response on AM, there's not a lot to choose between performance on AM and FM. Fiendish dial cord-drive system. These receivers will usually work well on both systems with minimal restoration.

A Rundradiomottagningsapparat

Finland has given us Sibelius and no doubt many other good things- although they can't lay claim to Huckleberry- but somehow I hadn't expected to acquire a vintage radio from that country. Nevertheless there it sits in my collection, a fine eight valve superhet from Turku which was the Finnish capital city before Helsinki took over in 1812.

Although assembled about 1926 in Finland, the design is clearly Swedish WITH circuitry very similar to a kit set produced in 1925 by the Särnmark company of Göteborg. In with the set was the Finnish owner's 1931 Broadcast receiver licence, costing 100 Finmark, giving authority to possess and use a Rundradiomattagningsapparat!

From the outside the set looks rather grim, an uncompromisingly rectangular box in dark oak like a coffin. But open the lid and it comes to life. Valves all twinkling in a row; coils with bright green insulation, orange wrapping and scarlet labels; and the whole thing hooked up with still-shiny wire dressed with proper right angle bends.

All the valves are triodes and the circuitry is generally straightforward. A mixer with separate oscillator feeds three 90khz IF stages with fairly flat-tuned transformers. Variable bias to the IF stages is provided by a volume control potentiometer across the LT supply. A leaky-grid second detector passes audio on to two transformer-coupled AF stages. Jack sockets provide for headphone operation from the detector or the first AF stage, if final loudspeaker output is not wanted. Inserting a jack cuts the audio feed to the following stages; but surprisingly it does not disconnect the filament supply to these, although this was a common practice in the 1920's for economy in battery drain and valve life.

Valves are 4 volt types, fed from a 6 volt battery. Three pre-set filament rheostats offer adjustment respectively of the group of six valves up to and including the detector; and, individually, the first and second audio stages. A master panel-mounted rheostat controls all filaments, with an 'off' position. A small meter on the panel is switched to indicate LT or HT supply voltages.

The panel mounted filament and volume controls are of interesting construction. The resistance element is wound on a flat strip pressed against a helical cam of which the point in contact at any moment 'screws' along the resistance strip as the cam is rotated by the control knob.

The most unusual feature of the set, to me at any rate, is the use of the Ultradyne frequency changing configuration; I have never came across any other example of this. On tracing out the circuit I found the mixer anode going to earth through the IF transformer primary and the local oscillator coil, with no HT+ feed; and I thought "Silly old fool, you've got it wrong again!". But no, the accompanying diagram of the mixer and oscillator is indeed correct and the only potential on the mixer anode is the oscillator waveform. This means that the mixer valve will only conduct and amplify the incoming RF during the positive half- cycles of the oscillator excursions, which of course implies multiplicative modulation of RF by the oscillator and consequent production of difference frequency to form the 90 khz IF.

As I have said, I had never come across the Ultradyne arrangement before: but I found a description on page 156 of George Sterling's 'Radio Manual' where it is attributed to 'the late' Robert E. Lacualt who had designed the Ultradyne sets beginning with one described in *Radio News* for December 1923. Another reference, in a German vintage wireless magazine, credits 'von Lacault' as originating the design in 1924.

Since the multiplicative mixing takes place in the electron stream following the grid, there will be no coupling of the oscillator to the aerial circuit apart from that through the triode anode/grid capacitance. The Ultradyne would therefore be relatively free from the oscillator radiation troubles which usually beset the usual additive mixers of early superhets. Additionally, Sterling says that 'the circuit is especially sensitive to weak signals'; and this could indeed be true since, as a multiplicative mixer, the valve does not have to work on the low-slope bottom bend of the anode characteristic.

Certainly it works well in my receiver, but whatever its advantages the Ultradyne does not appear to have set the world on fire. Although virtually unknown in England, I learn that several models with that name were produced around 1924 by the Phoenix Radio Corporation of New York. I would be interested to hear of any other examples of the use of the technique.

Pat Leggatt

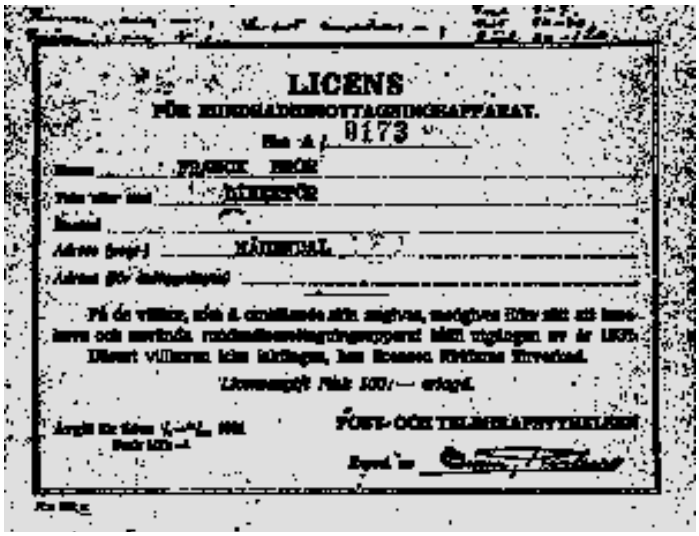

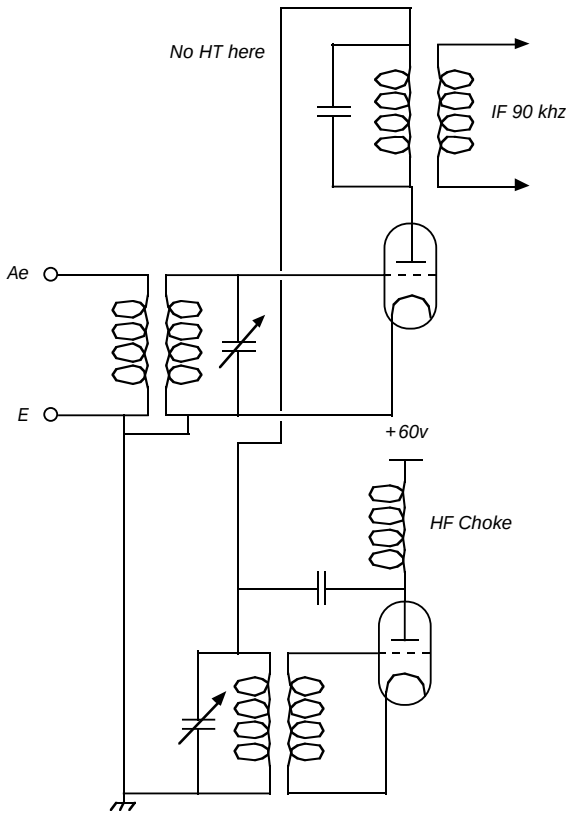

The story of Pilot Radio

by John Watkins

My involvement with Pilot dates from the winter of 1935. I was approaching my eighth year and, having plodded homewards the three miles from my elementary (junior) school in Cheltenham, passed through my father's photographic shop ("The Raeburn Studios") to the rear premises where we lived and had our being. I was looking forward to Children's Hour - perhaps Uncle Mac, David (the all-too-recognisable pianist and story reader), Toy Town, etc., but these delights would have been more than thirty minutes later at five o'clock. All the same I looked across the room to where the radio (or wireless, as we invariably called it) was perched, and was surprised to see what I later discovered was a Pilot X65 radio instead of the nondescript box whose identity I have never been able to re-discover.

The X65 looked very old-fashioned to an eight year old English school boy. The speaker grill seemed rather like a miniature stained glass window such as one might see as the main lighting in a large parish church. Later my father demonstrated the clearly lit "Station Named Compass Dial with Selective Illumination" (as the handbook described it - "Compass Dial" being more appropriate than "Aeroplane Dial" which is the jargon used today). I could see that this was a much superior wireless to the indifferent long and medium wave receivers we had known until that time.

The short-wave bands were a revelation, even though U.S.A., Canada and, much more rarely, Australia were the only English speaking stations to be found. All the same the numerous foreign tongues we heard from such exotic-sounding stations as Caracas, Ecuador, Valencia etc. gave us a feeling of being in touch with the whole world - or living in the Tower of Babel !

Many early Pilot designs were essentially short-wave receivers, with Broadcast (Medium) added when broadcast transmission and reception became popular from the late 1920's. Long wave was added to Pilot export receivers which were aimed at the European market. Ninety-two countries were claimed as Pilot's trading area, and despite the lack of a Trades Description Act at that time (1935) such researches as I have been able to make support this claim. Indeed the policy of spreading their franchises before establishing a stronger position in the home market (U.S.A.) was a possible weakness limiting the ultimate development of the company. It only needed a war or an economic disaster in one of Pilot's foreign outlets to pull the rug from under the firm in those areas. On the other hand, Pilot was initially too small to compete with the giants - Philco, R.C.A., Zenith, etc. effectively in their home territory, so probably world diversification was inevitable.

The first Pilot radios on sale in the U.K. were shipped complete in their cabinets from the U.S.A. (1935). By 1936 a British assembly factory, using some locally made parts, was in being. To overcome the voltage differences between U.S.A. and other countries the radios had multi-voltage mains transformers, ranging from 115, 125, 150, 220 and 240 volts. The firm (or "Corporation" as it was called) was, like most U.S. electrical manufacturers, adequately equipped to deal with the A.C./D.C. problem, since the situation in the states was at least as chaotic as in most other industrial parts of the world. Pilot had worked for years to make their universal sets as close in performance to straight A.C. as possible. Part of the radio scene in pre-World War Two America was the organisation of competitive events between different makes of universal receivers. Pilot universal radios usually won in terms of distant stations received, so there was a justifiable confidence in selling them internationally.

Even the modest little Model 125 (123 in the states) had a more than acceptable performance. It had short, medium and long waves, an R.F. stage, and was well designed. The cabinet was quite small, looking almost like the top half of an X65, so made a good bed-side or kitchen radio - almost a fore-runner of that far inferior but much more famous radio the "Little Maestro" of 1939.

The imported Pilots of 1935 were all superhets, ranging from the Model 45, (4 valves, medium & long waves) Model 92, (A.C./D.C., 5 valves, long & medium) the 125 referred to above - 6 valves, 3 wave bands, A.C./D.C. and the Model X65, the superb little 6 valve A.C. superhet, (long, medium & 2 short wave bands) which began my interest in the marque. There was a console version of the last mentioned set, the C.X.65, identical to the table model, but with a massive 12" speaker which the X65 chassis drives with ease. Two more table models were imported, the 105 (5 valves, medium & long wavebands) and the 55B (5 valves, 3 wave bands). The last of the 1935 U.K. imported range was the Pilot flagship of the time, the 115. This monster had eleven valves, 5 wavebands (3 short), jack sockets for input (P.U.) and output (headphones) as well as an extension speaker socket. Reception of Australia in this country was guaranteed - no mention of how many times a year though! With its 10" speaker and claimed 12 watts output from two pentodes in push-pull, strapped as triodes for harmonic quality, it is still an impressive instrument. There were console and radio-gram versions of this model. I have the chassis from a combined radiogram & cocktail cabinet version of the 115!

The foregoing has been largely inspired by personal reminiscences of the models mentioned. As this is intended to be something of a history of the marque I must go back more than a quarter of a century before 1935 to 1908 when the founder of Pilot radio, Isidor Goldberg, set up the fore-runner of Pilot Radio, the Beacon Electrical Company. Initially the firm made batteries in a loft in Manhattan, soon expanding to slightly larger premises at 103 Broadway, Brooklyn. Some small parts were made from this address but real manufacturing didn't begin until the move to the much larger building at 323 Berry Street, a few blocks away. The business traded under the name "The Beacon Electrical Company" selling mainly

Pilot 8 valve 'Dragon' superhet

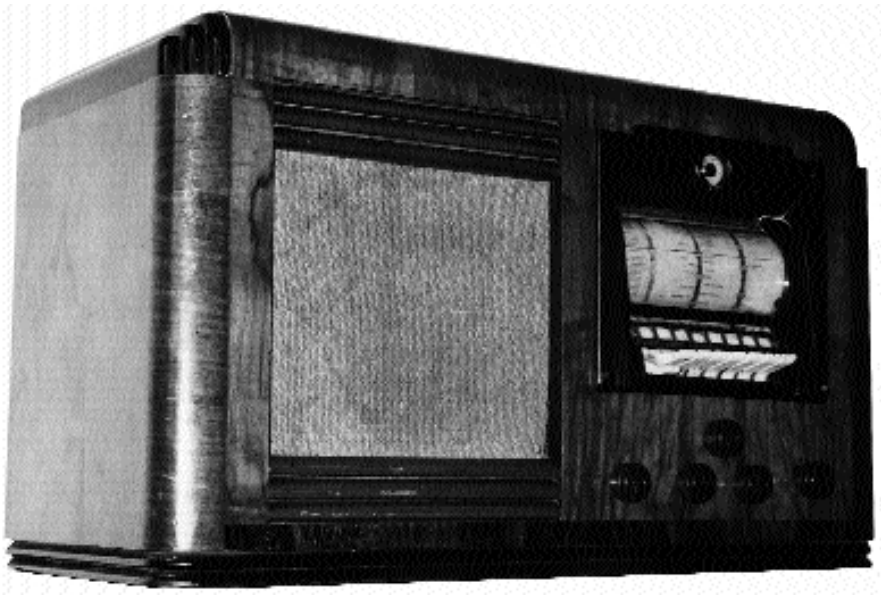

Pilot PT 36 circa 1937

Pilot model 203 circa 1937 (US)

Pilot model 585F

parts and later home-built kits for enthusiasts of the new-born hobby of radio. By 1925 Beacon was successful enough to be manufacturing and selling complete assembled radios, which was by then essential for remaining in business, as the numbers of D.I.Y. enthusiasts making their own sets had greatly diminished, and in any case were never a large enough clientele to support a worthwhile expansion of production. Since broadcast radio had come into being, more and more families were 'keeping up with the Joneses' by buying the most extravagant

Pilot model CX 65 (console version of X 65)

radio sets they could. This transition continued and was soon to lead to the much larger radio industry of the 30's and beyond. At this time Goldberg's business was known as "The Beacon Electrical Manufacturing Co., 323 Berry St., Brooklyn, New York".

In the next year, 1926, "Beacon" was sufficiently healthy to combine with a firm called "The Pilot Electrical Manufacturing Co.", whose headquarters were at 100 South Third St., Brooklyn. The fact that the Pilot E.M.C. moved up the road to Goldberg's Beacon premises (Berry St.) indicates that it was more of a takeover by Goldberg than a merger. The new company decided to become big in components while it settled down, so radio production was briefly dropped, and by 1928 Pilot claimed to be "The world's largest Radio Parts Plant". Pilot was certainly "one of the very few real fabricators of the radio industry. In a crowded factory in Brooklyn, N.Y., it made its own tools and dies and manufactured all the bits and pieces of its components and assemblies. It did all its own turning, stamping, winding, plating, forming, etc. Automac screw machines and power presses competed for floor space with the Bakelite molders, spray booths, etc. (Robert Herzberg). Certainly it seems to have been convenient for many radio producers to use Pilot components, so the claim was probably justified. From this point the name "Pilot" was used, as although Goldberg's 'Beacon' was the more dynamic and commercially successful partner it was sensibly decided that Pilot was a more appealing name.

Pilot returned to complete sets with the "Pilot Universal Kit" - so called because the design could be assembled variously to use four different circuit hookups. In 1928 the first of the "Wasp" short wave kits was produced. A three valve regenerative design, it was followed in the same year by a 6 valve A.C. set, with built-in filament transformer and separate "B" eliminator. The real take off point for Pilot however was the "Super Wasp", a 4 valve chassis with an R.F. stage ahead of the detector - an unusual feature in 1928. The design was so successful that it continued unchanged for 3 years. Alongside, in 1929, the A.C. Super Wasp came out, the only functional difference being the use of indirectly heated valves.

About this time Pilot obtained (from R.C.A.) a licence to manufacture valves (tubes) under the name "Pilotro". The detector valve (227) used in the A.C. Super Wasp gave unacceptable hum levels, so Pilot was driven to develop its own version of the valve, which was the reason for entering the valve manufacturing industry. Pilot successfully solved the hum problem, and could now claim to produce all its components. The firm's name was changed to "The Pilot Radio & Tube Corporation" soon after acquiring the R.C.A. valve manufacturing licence.

A car radio-kitset (the only car radios ever sold in kit form by any manufacturer) called "The Auto Pilot" (predictably!) came out in 1930. It was powered by three 45 v. "B" batteries, and was very popular at that time. Robert Herzberg, editor of "Radio Design", Pilot's company magazine, writes: "With the Brooklyn factory taxed to capacity, the management was hunting for new facilities even before October 1929. They soon found a cluster of huge buildings in Lawrence, Massachusetts, formerly a cotton mill whose business had been transferred to the warmer climate of the Carolinas. The banks were anxious to get this white elephant off their

The 11 valve Pilot model 1425 (circa 1941)

hands, and sold it to Goldberg for hardly more than the original cost of the freight locomotives that pulled cars around within the grounds of the establishment. Lawrence in 1929 and 1930 was something less than an attractive town. However practically the entire engineering staff and administrative personnel along with their

Pilot model CU 650 (console version of U 650)

production workers moved up willingly, because their salaries were high and jobs in other firms were scarce. Unfortunately the interruption of output and continuity proved disastrous. The whole operation collapsed within a short time after the particularly bitter winter of 1931-1932. During the Lawrence period, both versions of the "Wasp" remained in production."

The first self-contained (Speaker & Chassis) A.C. Broadcast Radio, the "A.C. Midget" was introduced in November 1930 and a year later Pilot's

Pilot Short-Wave converter (circa 1931)

first consoles, a 7 valve and a 10 valve superhet also appeared. Perhaps the depression years were not the best time for such luxuries. I know of no surviving examples of these consoles. In December 1931 the first Pilot all-wave superhet, the "New Super Wasp" was announced. This was a double superhet, having two linked circuits on a single chassis, though later the short wave section was available as an extra for use with almost any other Pilot radio.

Between 1931 and 1932 28 different chassis were produced which, fitted into various cabinets, resulted in 48 models, from the 4 valve "Rainbow" to the 10 valve superhet console, C153.

1933 was the year of catastrophe for the firm. The Lawrence factory fell into inextricable financial difficulties and by the end of the year, Pilot was extinguished. This was the end of the first Pilot company, lasting from 1925 to the end of 1933.

Isidor Goldberg was not beaten, however. He returned to New York and founded "The Pilot Radio Corporation" in Long Island City. To begin with the style was much as before, with names such as "The 8 Tube Dragon", and "The Dragon All Wave". By 1935 though the old style had all but disappeared, and Pilot receivers of that time, in keeping with the rapid advance of radio design generally, had both a new look and a better performance, though the earlier "Wasps" and "Dragons" had been among the leaders in their day.

It was from 1935 that Goldberg began to see the possibilities of a world market, and special export models, with multi voltage mains transformers and long wave reception were sold in more than 90 countries. Pilot receivers from this time began to be better known outside the U.S. than in it! Soon after the export to Britain began (1935) a British Pilot Factory was set up, in 1936. The British version of the X65 was the U650. Essentially the same circuit as the X65, the differences being a 'magic eye' tuning indicator and a cabinet which to my eye is far less attractive, but a good, 4 wave band, R.F. staged radio for all that. The little 125 and some of the other less ambitious radios, as well as the 11 valve 115, were discontinued. The new range, not yet fully British designed as the factory had only just been erected, included the U650, the BL550 and the B344 (battery powered). As with many firms, the model numbers were a descriptive code, e.g. U 650 = U.K. (NOT universal), 6 valves, and 5 was a code number reinforcing the European nature of the circuit - e.g. long wave. This code was not consistently applied, but usually had some relevance to the radio it was attached to, if you could decipher it. The U650 was soon offered with octal valves, a horizontal cabinet even uglier than its progenitor and re-coded the U475 - a slightly different system where 4 stood for 4 wavebands, 7 the number of tubes, including the tuning indicator, and 5 still the European identifier.

Having dropped the 11 valved 115, (incidentally 115 is a perfect example of the descriptive code as far as it goes - 11 valves, European - long wave) Pilot U.K. in 1937 designed, with little American influence from the parent company, the U 106. This is generally regarded as the best of the series, American or British. The code is still consistent: U = U.K.; 10 = 10 valves, or at any rate, tubes, counting the T.I., and 6 wave bands - long, medium and 4 short waves, making the U106 an even closer approach to bandspread.

In the States the same style carried on until the early 1940's. The 365 was a magic eyed version of the 115, the G528 a 12 tube version of the British U106 (only it doesn't work as well!) and hosts of not very different versions of the lesser lights.

From about 1943, with the advent of domestic F.M. and the expansion of T.V. the reality of "Steam Radio" had evaporated. Mega chassis were still offered, and they performed, even those without a F.M. section, very well, but with the exception of the millionaire Rolls-Royce types, the Scotts, McMurdo Silvers and a very few others, the great days of radio marques which, like automobile makes, inspired real partisanship from their owners, had gone. Who is crass enough to boast of a Ferguson T.V., or a Sony transistor?

There were of course Pilot T.V.'s, a popular model in 1949 being the T.V.37,

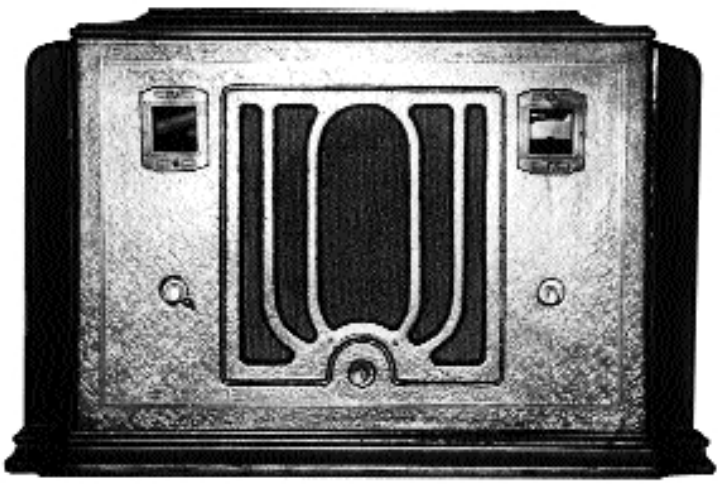

Pilot Model 91 US (circa 1931)

which had a 3" (!) screen, and was easily transportable. It measured 24" wide by 18" deep, was about 10" tall and with 21 valves weighed less than most record players of the day.

Pilot 3" screen T.V. cost $99.99: first US television under $100 (circa 1949)

The Pilot products referred to herein do not make a full catalogue, and even the attached list is representative rather than exhaustive.

Isidor Golberg continued to control the main U.S. company until close to his death in the early 1960's. The global subsidiaries such as Pilot U.K. were not immune from the general deterioration. Such refinements as negative feedback, more efficient component design, etc. could not counter the greater public interest in Television, and despite the enormous difference in cost of television and radio, the public was 'hooked' on T.V., valve radio seemed to have run its course, and anyway T.V. production was where money was obviously to be made

An Early Radiogram

G. Dixon-Nuttall

Nobody wants radiograms these days; but anything old and unusual enough becomes an antique and interesting. The Philips 2811 is sufficiently rare, I think, to qualify.

The 2811 is the radiogram version of the excellent 2511, which we have met before.(see Bulletin 16/3). The chassis is somewhat modified by improving the output and reducing the hum. An energized speaker is fitted, with its own power unit. The pickup is Philips' own; I don't know if they made the motor, but it is a very good one.

It is a quality product, but so it ought to be. The price was £80, which in 1930 would be about £2,500 in today's money. For that you got a very solid item which has lasted for sixty odd years with very little wrong with it.

The history of this set is known, as it had belonged to the same family for the whole of its life. It was in very nice condition except that the children had used it as a goal post at some time, and smashed the motif on the speaker grille. This I managed to identify from what was left as being the same moulding used in the model 930, so I have managed to replicate it in wood and Plastikard. A spray with Rio Brown and it looks good, from across the room anyway.

Removing the chassis was not easy. It appears to be a big cabinet, but there is suprisingly little room inside when you try to manoeuvre the heavy chassis. This is at the bottom of the cabinet, and the dial drive operates by means of several feet of steel tape round two drums. The bandswitch uses a long lever and a rack and pinion. Thankfully they had not yet discovered Bowden cables!

The chassis is modified, as mentioned. An extra stage of decoupling is added to the detector, and there is an adjustable hum reducer, which alters the earth tap across the L.T., by means of a potentiometer. This is accessible from outside the cabinet through a special hole., and is quite critical. The output is increased by using a PM 24C in the output stage, this being a beefed-up PM 24 which runs on 400 volts and produces 3.5 watts.

In fact there was very little wrong with the chassis, except for one or two leaky capacitors and two dud valves. As usual, the problem was finding valves which were short enough to go in the screening can.

The radio volume control is a wire wound 200 ohms affair which varies the bias on the first R.F. stage. This was O/C in several places, but I had a Philips replacement control of 30K which went in nicely. As there is no current drawn fom the slider it doesn't matter what value you use as long as you put 200 ohms across it. The advantage of using a Philips control is that you can use the original 6mm spindle, so that the knob still fits.

The gramophone volume control was a surprise, as it was a nine position switch, with dinky little wire wound resistors, with the values arranged to give a log law. Two of them were O/C, but by drawing a graph it was easy to make a reasonable guess as to what they had been. Getting the volume controls out of the cabinet was trying, as they were fastened to the underneath of the top of the cabinet with tiny wood screws, one or two of which seem to have been put in with a hammer. I imagine they assembled it upside down, but turning this thing over was too much to contemplate.

All the bits go into a cabinet made apparently of solid walnut. Even the back is solidly made, being a frame of five by one supporting a steel grill. It is, of course, polished, and has its own lock and key. As there are so many live terminals it also carries a safety interlock. The lid closes very slowly under the influence of a pneumatic stay.

The pickup had the usual trouble (rock hard rubber). The coil was also O/C, but I managed to salvage it by finding the end. It is a very heavy magnetic type on a very short arm. Wireless World didn't think very much of it when they tested it in April 1930; it does, however, make a cheerful noise.

I don't know who made the gramophone motor, but it runs very quietly. It has an odd feature , as the turntable is driven via a spring, presumably to lessen the load when the motor starts. This has a creepy effect, as the motor will revolve when switched on, even when there is no power.

The eight and a half inch speaker has its own power supply, as mentioned. This gives 270 volts to the 3,800 ohm field, so supplying 20 watts. The external field is almost zero, which made me think that it didn't work when I first switched it on. The speech coil measures 16 ohms, so the impedance is probably about 25 ohms.

Tone control is effected by switching in a series choke and a parallel capacitor, which I measured at 10 microfarads, across the speech coil. This cuts the top cruelly, as one would expect, starting at about 600 Hz. There is normally slightly too much of it, so you have a choice of too much or too little.

All the various units are connected by a cable form which looks like something from a vintage car, connected to screw terminals.

Having got it working it certainly is impressive. If

A High-grade Radio-Gramophone with Large Output and Many Refinements.

you use the right sort of record, with plenty of vo-de-oh-do, it would be fine for a speakeasy party, though opera is a bit painful. The frequency response has one or two interesting bumps in it, particularly one at 50 Hz which gives the bass a good clout.

I imagine that there are only very few of these left, due to the difficulty of working on them. Certainly the trade must have found them unprofitable to repair. It is nice to know that there is one which works, though it is fair to say that I am glad it doesn't belong to me. Most radiograms deserve a decent burial, but this one really is something special.

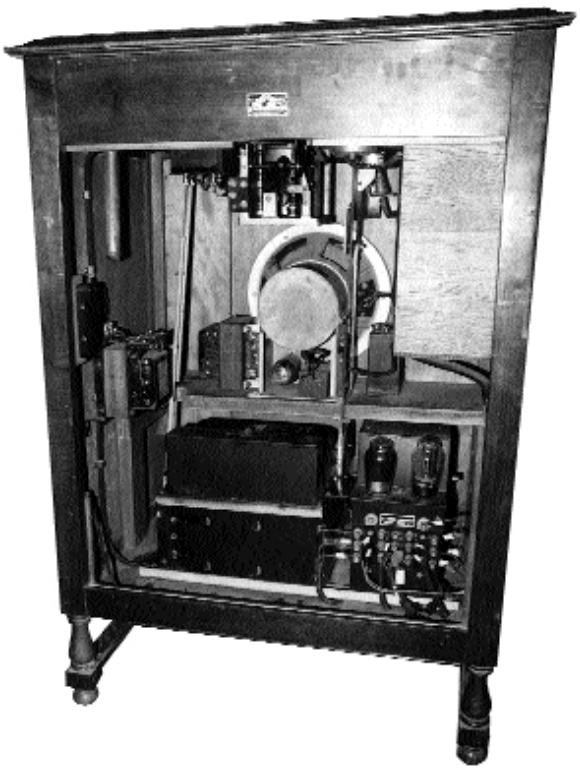

Minutes of the Committee meeting held at the Vintage Wireless Museum at 4pm on Saturday 10th June 1995

Apology for absence from Gerald Wells who was the host of the garden party that was still in session at the museum.
Minutes of the previous meeting were read and after the amendment to the item A.O.B., substituting 'Steve Sidaway' for 'Ken Tythacott', as the author of the report on the previous Harpenden meeting, the minutes were approved.

Matters arising

Ken Tythacott handed a tax leaflet, 'Guide for Societies', to the treasurer.
The Chairman reported that he had now received from the previous Editor the stock of back numbers and master copies of the early Bulletins, 1976-1981 and material related to earlier Bulletins which he is now sorting. There were no separate copies of Norman Jackson's drawings other than those pasted up in the master copies. There was a file of unused articles that the previous Editor had passed to Carl Glover. The Chairman said he had also taken charge of the stock of posters and badges. He said he was satisfied that we now had all the Society's property.

Report by Carl Glover on the next Bulletin

Carl said that he had no secretarial help at the moment and that Mike Barker was helping with the typing. Carl advised the meeting of the need for a scanner and for the need of professional typing skill. After discussion it was agreed that Carl should obtain estimates and report back.
He reported that he had enough material for the next issue. With regard to the work and costs of posting he had obtained an estimate of £400, including postage costs, from a firm that undertakes this work. It was agreed that this was acceptable.

Report by Ian Higginbottom on the newsletter

He said he had advertisements enough for a four page issue.
It was agreed that this was a most valued service to members. The Information Officer reported that it also provided information for his list of members interests.

Report on Insurance cover of Society's events by David Read

David informed the meeting that the Society was covered for public liability. The premium was £250 p.a. and our cover was one million.

Report by Ken Tythacott on final arrangements of Harpenden meeting, 11the June

Ken presented a full, detailed, written report. He sought meeting's approval for the suggested scale of the gratuities and this was agreed.
He expressed his opinion that it would be easier for all concerned if members could pay at the door. (the pre-booking of stalls would continue). This would, of course, require some means of identification. He said that a membership card would meet this. Such a card has often been requested by members.The card could be colour coded for the year and could be issued on joining or renewal. This was agreed to in principle.

Report by Ken Tythacott on the proposed BVWS Centennial exhibition for 1996

Ken presented a similarly full written report. He gave the details of his consultations with English heritage. They had been co-operative and helpful. The upshot was agreement that the venue would have to be outside London and Ken was maintaining contact with South Eastern Region. He was prepared to contact other regions near to London but it was agreed to shelve the exhibition for being too ambitious to be managed by the Society. The suggestion of a social event instead received some approval. Venues in London were suggested and ideas were forthcoming such as adding interest by staging a small exhibition and / or organising competitions. Overseas members and some well-known figures could be invited. It was agreed this would be discussed further at the next meeting.

Proposals for future events and venues (Ken Tythacott)

It was agreed that Harpenden meetings will continue and provisional bookings be confirmed. Agreed that, while the law is not clear on the issue, we shall continue to advise that mains plugs be removed. We may be in the clear anyway in that we are not selling to the public. Ken agreed to write a brief report on this matter.
Regarding the staging of social occasions it was agreed to seek feedback via the Bulletin.

The Bulletin: ways to help Carl

It was Agreed to assemble a panel of members who are experts in their chosen field whom Carl may call upon for help. It is hoped that they will provide or obtain articles and reports etc. and also assist in the preparation of them for publication.
Carl was seeking guidance on adverts in the bulletin and the charges thereof. It was agreed that we would leave the decision on the amount of the charges to Carl's judgement.
It was agreed to put before the membership the proposal that in 1996 we should revert to four bulletins a year. Issues would be proportionately larger. It would provide more time for preparation and would achieve a saving in postage costs. The Newsletter would be published six or seven times a year in which case Ian Higginbottom would require assistance. This would provide for reminders of events and the imparting of any important news items. The format would be discussed further.

Any other business

The treasurer distributed forms that he requested claimants to use when seeking reimbursement of expenses incurred. It was reported that Fred Ward wishes to inform the Society that it could have a call sign - GB5WS. It was agreed that while the Society did not wish to be a member of the RSGB, we would be pleased to accept it as a symbol of goodwill.

The next meeting would be held at the Vintage Wireless Museum at 7.30, 8th August.

Letters

Boat race receiver 1932

I was very pleased to see David Read's interesting article on the history of Radio Instruments.
I have only one RI receiver: not unfortunately one of the two early ones David illustrates, but unique nevertheless. It is a 4-valve job made in 1932 to a BBC design for river-bank reception of the Oxford and Cambridge Boat Race commentary transmitted from the launch following the boats.
The Boat Race was first broadcast in 1927, using transmitter and receiver equipment hooked up by the BBC and operating on 120 metres. By 1932 the BBC evidently wanted more professional equipment and contacted RI, then at Croydon, to build the receiver. I enclose a copy of the BBC circuit diagram (rather marred by damp from earlier years) which is designed to operate on about 75 metres and give an output to line rather than loudspeaker. The metered detector anode feed acts a tuning indicator.

Pat Leggatt

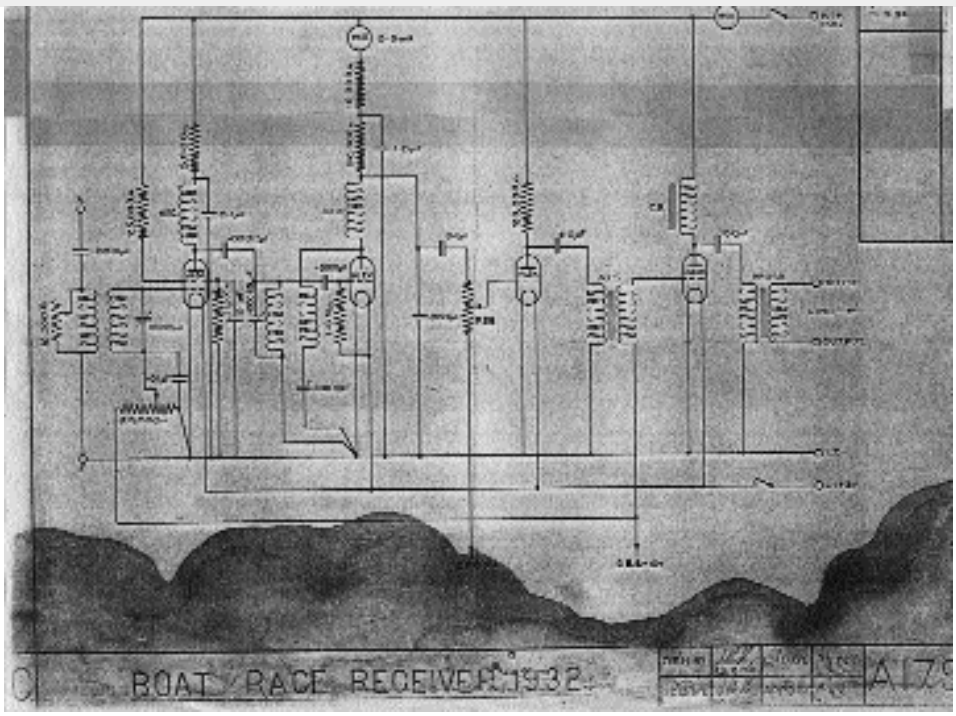

Election costs

Dear Editor, The item 'Election Costs £2,372' in the statement of accounts published in the last issue of the Bulletin may be a little misleading to members.

It should have been made clear that our Society were only charged £926 by the Electoral Reform Society for organising the recent Postal Ballot of Officers on the 1995 Committee.

The substantial difference between £926 and £2,372 was largely due to expenditure by the 1994 Committee on the following:

1 Sending the membership the Postal Ballot Form, October 1994 that included a stamped addressed envelope. A Ballot that failed to resolve the issue at stake.

2 Sending the membership details that the AGM on the 4th December 1994 would no longer take place. This resulted in the forming of the Emergency Committee.

yours sincerely, Gordon Bussey

Deputy Chairman, Emergency Committee (4.12.94 to 2.5.95)

More for your money, or less?

I was pleased to see, in the last Bulletin, a healthy statement of accounts for the Society, and the notes explaining various factors. However, I would like to make clearer the overall election cost of £2,372.58, in view of the fact that I am on record as giving the size of the *total Electoral Reform Society* bill (including all their postage) as being £926 (Bulletin vol. 20, No.2, p.19). The *additional* costs of the election were photocopying, (at cost I was able to arrange, £100. 36), and paper at trade price (£108.85). Other miscellaneous items included postage, telephone, and finally a taxi to lug the papers over to the Electoral Reform society, making a grand total of certainly less than £1350. The difference between this sum and the given total for the year of £2372.58 is accounted for by the canvassing and balloting process carried out under the auspices of the previous Committee.

It was disappointing to see that the bulletins for 1994/5 had come to £14,392.42, merely 2% less than the cost incurred the previous year. David Read has referred to the "significantly lower cost of the Bulletin as now produced (vol.20, No.1, Feb 1995 p.3), and I would like to emphasise that this is indeed true and should be much more apparent in the next set of accounts. Our present printing and origination bills are averaging £1 per issue, and the new UK bulk mailing charge comes to 31 pence per issue per person (including overseas members). I have compared the Societies' printing bills with quotations from two other first-rate printers and can confirm that the Society has secured a good 'deal'. I hope these points will allay any doubts arising with watchful members!

May I conclude by urging fellow members to submit stuff to the Editor, or even just ideas which someone could expand into an article. If grammar is not your scene- the Editor can knock it into shape for you! I suppose that means I've got to get writing now, too-D*mn!

Tom Going

Treasurer's Reply

Gordon and Tom's letters are factually correct. It is always tricky to judge just how much accounting explanation to provide, but in this case I would be surprised if members were misled. Note '4' to the accounts in explaining the total election costs of £2,372 clearly stated "the substantial increase in expenditure is wholly attributable to extraordinary costs associated with printing and postage of election addresses, *together with the costs of the Electoral Reform Society.*" Since the precise details of the Electoral Reform Society's costs had been provided in Bulletin 20/2 I did not consider it necessary to provide them again.

Yours sincerely David Read

Pilot Radio

In order to complete my research and assemble production information for eventual publication, I am soliciting collectors for serial numbers for the following Pilot Radios:

American manufacture- 293, 295, 243, 245, 114, X114, X115, 115, 364, 365, G508, G509, G528, G529, H710 series, H594, T-1364, T-1360, T1460, T1464, H262, 304, X304, 305, X305, H595

English manufacture- U106, T59, PT36, U353, U357

Responding individuals will receive a free copy of this survey and a copy of the Pilot book at cost. Please respond to John Watkins, 23 Arnold Road, Binstead, Ryde, I.O.W, UK PO33 3RQ.

or

Bill Moore, 3049 Box Canyon Rd, HSV. AI., 35803 USA.

N E W S

Further Harpenden meetings

More dates for your diary - mark them in now! Swapmeetings are coming up on Sunday 24th September, and Sunday 26th November. Please note carefully the return address which will be given for your Harpenden applications.

IEE conference

The Institution of Electrical Engineers will be staging their conference on '100 years of Radio' between the 5th and 7th September 1995. For more information please contact: HYR95 Secretariat, Conference Services, Institution of Electrical Engineers, Savoy Place, London WC2R 0BL. Tel: 0171 344 5477, Fax: 0171 497 3633, Telex: 2611765 IEE LDN G, Email: conference@iee.org.uk

Popov versus Marconi - the Centenary of Radio

Radio, probably the most influential of all technologies, is 100 years old. 1995 is considered the centenary, due to the experiments of Popov and Marconi in 1895.

With models of the early apparatus the invention of radio communication will be looked at through the work of Alexander Popov and Guglielmo Marconi.

Russians regard Popov as the inventer of radio. May 7th is named 'Radio Day' and is an annual celebration.

Marconi succesfully applied for the world's first patent for radio on 2nd June 1896.

BVWS member Ralph Barrett is presenting this demonstration lecture at the Royal Institution 21 Albemarle Street, London W1, refreshments commence at 6 O'Clock followed by the Ralph's talk at 6.30. There is no charge for admission or refreshments. This is a public lecture, no tickets, just come along.

It will also be possible to see Faraday's laboratory museum.

Christmas National Vintage Communications fair

The fifth National Vintage Communications Fair will take place in the Pavilions hall of the NEC in Birmingham on Sunday 3rd December, and will feature thousands of rare and collectable vintage technology items with special emphasis on early radios, television receivers, gramophones, telephones and classic 1950s hi-fi. In attendance will be over 300 specialist dealers from the UK, the Continent and the USA.

For further Information please contact:

Jonathan Hill, Organiser NVCF'95, 2-4 Brook Street, Bampton, Devon EX16 9LY. Telephone (01398) 331532.

AWA annual conference, Rochester, New York, USA

The 34th annual Antique Wireless Association conference is being held from September 6th to the 9th of September at the Thruway Marriott hotel located in Rochester in New York State. If you happen to be on holiday in that part of the USA, you have simply got to go as it is beyond comparison for size and duration in the field of Radio collecting.

Bulletin Index

The Bulletin Index is currently available up to issue 20/3 and is a complete cross reference of authors, subject matter and main articles back to the beginning of the society. Please send a large SAE with a cheque for £2 payable to Pat Leggatt at 28 High Park Road, Farnham, Surrey, GU9 7JL.

New Articles

If you have anything interesting to say concerning Wireless, Television, broadcasting etc. please send it to the Editor for possible future publication in the BVWS Bulletin, as the Bulletin is only as interesting as the articles that comprise it. We welcome all suggestions and comments regarding the new appearance of the Bulletin and hope that it is catering towards your needs as a collector / enthusiast / historian. Your article can be just a few paragraphs long as long as you think it conveys its message across to your fellow members.

Also if you have any photographic material that would look good in the bulletin, don't hesitate to post it to the Editor.

Please send all articles typed and / or on floppy disc to:

Carl Glover, c/o BSS, 1 Rothsay Street, London SE1 4UD

Detail of a Pilot U 385 superhet