BVWS bulletin

volume 24 number 3 Autumn 1999 www.bvws.org.uk

£3.50 | free to members ISSN 0955-9345

BVWS Committee

Chairman:
Mike Barker,
59 Dunsford Close,
Hillside Park, Swindon.
Wilts SN1 4PW
Tel: 01793 541634

Bulletin Editor:
Carl Glover,
c/o Runciter Corporation,
33 Rangers Square,
London
SE10 8HR
Tel/Fax: 0181 469 2904

Treasurer: Jeff Borinsky,
3 Woodberry Grove,
London,
N12 0DN
Tel: 0181 343 8121

Events Co-ordinator:
Steve Sidaway
Tel: 0181 943 1249

Membership Secretary:
Mike Barker,
59 Dunsford Close,
Hillside Park, Swindon.
Wilts SN1 4PW
Tel: 01793 541634

Members' Advertisements:
Ian Higginbottom,
5 Templewood,
Ealing,
London W13 8BA
Tel/Fax: 0181 998 1594

Committee Secretary
Guy Peskett
13 Warneford Road
Oxford
Oxon
OX4 1LT
Tel: 01865 247971

Bulletin of the British Vintage Wireless Society
Volume 24 No.3 Autumn 1999

www.bvws.org.uk

Separations by Cutting Edge
Printed by Apollo

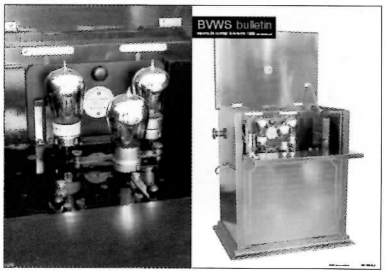

Front Cover: Marconi V3.
Rear cover: Detail of Marconi V3.

Front and rear cover photography by Mark Groep
Graphic Design by Carl Glover

Assistance by Rob Chesters, Ian Liston-Smith and Ian MacWhirter.
Proofreading by Mike Barker,Ian Higginbottom and David Read.

Contents

From the chair

Recently I was asked how I store my collection. Well, for the best sets in good condition or restored, I have a room set aside, but for those that are waiting to be cleaned, in need of bits or just too big for the room, I have them stored in my garage (this will have to change!) or workshop. I have a strict rule that I will not allow them to encroach on any other part of the house.

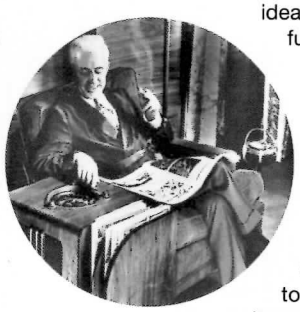

This raised a few points which may prove useful to you in storing items. Firstly, the loft is not a good place to keep radios unless you have prepared it beforehand. A normal loft will suffer from dramatic temperature changes. Most are dry, although this may not always be the case. Under these conditions you can find that many cellulose-finished cabinets may be spoilt by the summer heat, so that you are able to just rub the varnish off with your finger, as I once found out on a Murphy A3. The practice of using plastic bin bags and the like is also something to watch out for, as these if sealed will not allow any air to the item, and you may find that a chassis is nicely coated in rust when next unwrapped. The two worst things for stored radio equipment is damp and excessive heat. If you store items in a shed, then a very wise investment would be a de-humidifier, as the cold of Winter will do little harm, but the damp will. Whilst on the subject of collections, It is wise to keep an inventory of the sets you have, their condition and approx. value. Even better, photograph them as well. This being very helpful if you ever have to claim against insurance, or if the worst should happen, and someone else has to deal with the items after you have left this Earth. Be sensible and leave clear instructions as to what you want to happen with your collections. You would not believe how many times I have been contacted for help with disposals. Usually I find a local member and ask if they would like to deal with it or offer the services of a Society Auction. Most family members other than the collector are not interested or have no idea as what to do with a house or garage full of sets. Don't let the sharks at your collection. Tell someone what you want to happen and write it down. Better still add this as part of your Will. When doing this, never discount the contents of your workshops, test gear, books etc. Some can be very valuable. By far the best action if no instructions are left is to auction everything. Everyone has a fair chance to pay what they are prepared for an item. The sales will then be based on market values.

On a lighter note, Plans for an 'end of year' BVWS supplement are going very well. My thanks go to Pete Foden for his enormous contribution to this. The members handbook, although rather late in the year will be at the printers in the next few weeks and will be with you soon. Just a reminder that the next Harpenden on September 5th will have two extra attractions. These being the Radio workshop where you can bring along those items that have caused you to lose your hair, and still refuse to work and a display of Video equipment with working examples. If you are planning on bringing sets along for the workshop, please let Gerry Wells know what it is, if possible, so that parts and service info can be available on the day. This will be an interactive session where you can ask questions and gain a few of the secrets of restoration. Don't miss out on this event. Lastly, don't forget the auction of the year. The collection of the late Duncan Neale will be held in October as advertised in this Bulletin. The auction contains many very rare items in probably the finest condition ever seen and should not be missed.

Mike Barker

Below: the frenzy that was Harpenden, Sunday 6th June

It Came From Outer Sidcup

by John Ounsted

The mouth of Hell - The KB MR10.

Kolster Brandes ...the name has an angular, Teutonic sound. Its vaguely Bavarian feel might suggest solid German engineering, a company started by Herrs Kolster *unt* Brandes, perhaps, exporting mil.-spec. electronic hardware to dear old Blighty? Well I hate to disappoint you; the name might *sound* heavy and Germanic, but the radios themselves were too often lightweight cheapies, (especially the fifties offerings) and most were made right here in Britain, at that well remembered address,(another cacophonous mouthful)- Footscray, Sidcup, Kent.

Rather than seeming German, the radios have a slightly *American* feel, particularly in their valve types-ECC81's *not* '85's in FM front ends and fondness for solo heptode AM frequency-changers, and it's hence no surprise to find that their parent company was the US giant ITT. Sure, KB did have their moments: the BM20 we looked at in a previous article was a solid, likeable set (visually, at least, rather than technically) but sadly was an exception to the general rule; the FB10 "Toaster"s quirky styling likewise endeared it to many collectors-that is, until they saw the tacky interior build quality-like a transistor radio, *ante diem.*

The brand-name also sounds fake, an ingenious spoof, maybe-might it hold secrets..or is it a warning? K-O-L-S-T-E-R B-R-A-N-D-E-S...hmm. Out with the Scrabble tiles and try some anagrams; right away you can make ONE BAD SET, S.O.B. SET and A DORK'S SET, just for starters. A warning, then. Shuffling again, and lapsing into Mummerset we get 'E'S BASTERD OK? and, sounding a distinctly discouraging note, RANK DROSS-LET BE! Trying to be positive, you can, of course, also make LO, KB SERENADER! and TSK, BORN LEADER!

But cynicism soon reasserts itself; most of the anagrams are accurate, if unkind, and comically off-putting: SAD, BROKEN SET, is a good description of the normal condition of your first fifties KB. Using some of the letters twice gives scope for more spleen: BLASTED SET'S KONKED and, very aptly, SET BREAKS KNOBS, which indeed it does sometimes, when you attempt to remove them. A BAD DEAL SET indeed!

In this piece, I'd like to focus on just ONE BASKET SET, the Kolster Brandes MR10. This mid-fifties AM/FM bakelite offering looks harmless enough, (indeed, quite attractive when seen in white) but you'll likely find that it fully lives up to the epithets above. Nonetheless, it seems to have sold quite well and is fairly commonly seen at swapmeets. In appearance, it's another of those slightly anthropomorphic radios, where the knobs suggest eyes, and the grille looks like a mouth. Something like a cut-price thirties Ekco. But don't be too beguiled by its outer charms, though; circuit-wise, the MR10 is a bundle of bungle, sometimes difficult in the extreme to service or align, especially under some of the bizarre fault conditions that can arise. It may also feature weird schematic variations that are not mentioned on the service sheet and have to be pieced together by studying other contemporary KB circuits. Some versions of the chassis have a *penchant* for IF oscillation on VHF; restoring any kind of stable FM operation is thus not for the faint-hearted. One may easily stumble into oscillation during alignment, and the performance on that band remains stubbornly mediocre at best. Additionally, (and not unexpectedly from this make) the build quality is inferior to most of its peers. If, however, you relish a challenge, and you're tired of tweaking up all those nice easy Bushes and Pyes, then this NARK'D LOSER SET is for you. But don't say I didn't warn you!

Circuit Oddities

Before considering the MR10 in detail, it may be helpful to place this radio in its historical context, and to study similar associated models. You'll then get some idea what you're up against.

As hinted earlier, you may find strange circuit variations, that are not necessarily mentioned on the WET data sheets, or the

Later, modified MR10.

Newnes books. Some of the MR10's near relatives have circuits that are conflations of two other models. Unlike most of their rivals, who adopted standard circuitry, usually involving an E/UCC85 and E/UCH81 as FM and AM front ends, KB seem to have tried a bewildering variety of designs before finally stumbling on an acceptable circuit. Looking for a moment at the entire KB output from say 1955-59, there were *three* different VHF front-end configurations; two involved a 12AT7/ECC81 used in fairly conventional grounded-grid RF Amp/Self Osc. Mixer arrangements, in one of which the LO was arranged to run lower than signal frequency, in the other, higher; the third used a ECC84 cascode RF Amp stage, of all things. (Perhaps they thought they were designing a TV!) This double-triode was partnered by an outboard 6BW7 as Mixer/oscillator, and the combination did actually work quite well, at least, compared to some of the earlier circuits.

For the AM front end (which, as usual, doubled as a second FM IF stage) at least four different circuits were pressed into service; you may find a Toaster-style 6BE6 heptode (whose 10.7 MHz performance seems really disastrous) or an ECF82 triode-pentode-just in different vintages of the MR10! The latter works a lot better as an FM IF amplifier than the former, (assuming it isn't oscillating, that is). Other, costlier models had more normal triode-hexodes, like the ECH81 or 20D4, or even the quirky 12AH8 triode-*heptodes*. It seems these multi-gridders were better again as FM IF amps, and sets which fit them do have a passable performance on FM.

Moving on in the circuit, we see that there's no provision for AM limiting in the final IF stages of any of these sets; the suppressor grid of the 6BJ6 is not connected to the negative output voltage of the ratio detector, a standard technique in other sets, driving the valve into saturation. Neither are there any short time-constant R-C circuit tricks in the grid circuit, an alternative way to promote limiting. These omissions will hardly help distortion-free FM reception, and are redolent of cheapy sets, where VHF is not intended for serious use.

Inside the Set

The first thing you notice about the MR10's chassis is its strange smallness, compared to rival AC-powered AM/FM radios. You'll also find lots of unused switch and pot-holes; these permitted the same basic works to be used in a variety of models of differing pretensions and presentations: small sets, big sets, 'grams; horizontal knobs on the front, vertical knobs on the front, knobs on the front and side, horizontal tuning scale, vertical tuning scale etc. To this end some models had a fat, stubby ferrite rod mounted parallel to the chassis' short side. This allowed the chassis to be mounted with its major axis vertical whilst still keeping the rod in the right attitude for proper signal reception, and was done in two 'gram versions, (neither of which, however, you're likely to see these days), and in a rather better big table model, the NR30, to be discussed later.

The metalwork also has a hole for the valve holder for an EZ80 rectifier, fitted on all models except the MR10, which alone had a contact-cooled bridge rectifier. To its credit this last component seems reasonably reliable, unlike those fitted in contemporary TV sets. We'll discuss its possible failings later. The admitted versatility of the metalwork permitted it to be used (albeit with minor modifications) with all the ill-assorted and vacillating valve line-ups already mentioned.

Looking more closely at this chassis we see that certain sacrifices have been made to get it so small. True, the MR10's forward-looking use of a bridge rectifier allows omission of the normal EZ80 (and its attendant heater supply requirements), a clever touch, but KB really defied conventional wisdom by not encasing the FM front-end in a metal box; there isn't even any tin-foil on the base of the cabinet! Surely there's a danger of oscillator radiation from the unscreened coils? This was a major

continued on next page

headache for radio designers since ITV was just getting off the ground at virtually the same time as the start of FM broadcasting, and it was soon clear that the former was vastly more popular than the latter. Any interference with Band III reception would be seen as a heinous sin. Perhaps that's why, as we've already seen, some KB sets had the LO running at signal frequency *minus* the IF; this reduces the risk of the LO's second harmonic falling within Band III, since there is only a potential interference "overlap" of about 5 MHz. (Other, more respectable manufacturers, notably Ekco, used this LO-below-signal-frequency technique in their early FM sets). If you have an LO running at signal frequency-plus-IF, you get a much more worrying "overlap" of about 19 MHz, and this is exactly what *is* done on the MR10! Hence the screening concerns.

Furthermore, having elected not to screen the FM tuner section, the designers went the whole hog and confidently omitted the customary screening can on the 12AT7 front-end valve; again, this cover is invariably fitted over the ECC85's in the front-ends of the competition.

The mains transformer looks too small for this class of set, and it's no surprise to find that it gets noticeably warm after a few hours. I suppose it's no worse in that respect than the tiny transformers fitted in mains-powered kit today. As noted above, it doesn't have to heat a thermionic rectifier filament. The audio output transformer is also stingily small, and it too can appear overheated on some examples, the cloth tape around its windings looking black and peeling off. Despite that, the bass response is perfectly acceptable when used with a good quality speaker... which this set doesn't have, however. (The big NR30 model does). The transformer is mounted vertically on a metal bracket to save chassis space. (If, in a misguided quest for missing FM treble, you foolishly remove C44, the transformer starts thinking it's an electro-static tweeter, and treble transients may worryingly be heard emanating from it, rather than from the speaker. Best therefore to leave things as they were!)

Cabinet build quality is well down to the usual fifties KB standards; the speaker is secured to its louvered and rather tacky plastic baffle by those nasty bowed rectangular spring-steel clips that are graunched onto circular pegs. (You've seen smaller versions of these before, of course, securing the FB10's tuning scale in place). It's just about possible (with care) to remove the speaker clips without snapping the pegs, but this attachment method really is a cheapjack one-shot affair, and you feel cheated finding it in a "vintage" radio. KB seem to have sensed this (clairvoyantly) and, trying to make amends, they provide spare pegs, adjacent to each of the four main ones. Assuming you break the originals, these pegs allow you to remove and replace the speaker once... and that's your lot. It must then stay put until it rots!

The glass tuning scale has the opposite problem: it's not really fixed at all; incredibly, the evidence suggests it was simply gaffer-taped into the cabinet during assembly, being then supported more securely by the scale backing plate when the chassis was in place. Gaffer-tape not being everlasting, it's very likely that the glass may fall down and smash if precautions aren't taken when withdrawing the chassis for the first time after forty years. Oh well, at least the tuning pulley wheel is metal, not plastic, (like on the FB10), and stands a better chance of not breaking.

With all the style of a breezeblock - the unlovely but functional "Tri-Fi"

Trying to be fair, we can say that all these economies and omissions did at least produce a fully isolated AM/FM chassis that was beguilingly but suspiciously smaller than those on most of the KB's supposed competition. This must have pleased both the stylists and the engineers, who may have seen in the MR10 the chance to offer a slim, compact AM/FM table set, but still featuring a respectable double-wound mains transformer: no nasty AC/DC live-chassis or heat problems, and boasting a fancy selenium bridge rectifier as a further aid to coolness. Accounts and the production boys would also have been keen; the chassis' admitted smallness and versatility would have kept costs down... and profits up, come to think of it. The asking price for these radios does not really reflect their second-rate-ness; the MR10 cost £15 18s 5d, plus Purchase Tax, in 1955. For that sort of money, you could have had say the Murphy A362, a smallish but solid bakelite-cased AM/FM set of the time; a few years later and other makes like Bush and Ekco were pitching in with compact three-band VHF sets in the £15-17 range, (admittedly AC/DC), but nonetheless likely better bets for good reception. When the big three-speaker NR30 was launched in late '56, KB brazenly christened it "The Tri-Fi" and demanded £25 15s 6d (plus PT) for it; dully turned out, it did at least have the better-performing ECC84, 6BW7,20D4 front end discussed earlier, and alone acquitted itself well (see later) but again, one could have shopped around and paid about the same for the stylish and genuinely innovative piano-key Philips 543A. Mr Peter Nash's description of this last receiver in his article in Volume 23 makes it sound much the superior set, especially on the circuit side.

All these unflattering comparisons suggest that, for all their problems, the AM/FM KB's in general were nice little earners for the parent company, being made cheap but sold quite dear. Never let it be said that electronic Jerry-building began in the transistor era!

Restoration

If there's one thing that can definitely be said about an MR10, it's that it won't work properly, or often, at all, on FM when you first get it! It'll likely be completely dead, or if not, laughably distorted and very insensitive, even in a known good signal area with a good antenna. There's also the very real danger of IF oscillation, to add to the litany of woes.

The following is an account of the author's recent travails on two of these receivers; the first was the earlier version with the 6BE6 frequency changer. The second was the later type with the ECF82.

1. Early Type. 6BE6 fitted.

OK, this first receiver was initially completely

dead on FM, whilst AM still soldiered on. This was found to be an o/c in L13, and was at least easily diagnosed; there was no HT on the anode of V2, the 6BE6, when switched to FM. On dismantling the relevant IF transformer, a mould-spot was observed on the winding, very close to one end. In view of this closeness, it was decided to unwrap a few turns from the coil, remake a good connection, and see if the set could be realigned with adequate FM gain with a slightly reduced number of turns, this before contemplating trying to replace the entire IFT.

Unfortunately, although the set now showed some signs of life on FM, V2's gain still seemed to be inadequate. In view of this, it was next decided to unwrap the remainder of the original winding, and replace it with new enamelled copper wire of the correct gauge. Unusually, (and again suggesting KB penny-pinching) this winding is designed to be self-resonant; the spacing between individual turns produces a capacitance that, combined with the anode capacitance of the valve, resonates at 10.7 MHz with the inductance of the coil. The normal discrete shunt capacitors are hence omitted. Although care was taken to copy the exact configuration and winding spacing of the original coil, the performance was still poor. It was possible that the secondary had also suffered from the same mould, which had somehow lowered its 'Q', whilst it still retained its DC conduction. (The whole chassis of this particular set was covered in that evil greeny-brown gunge that seems to consist in equal measure of rust, dust, wax and mould spots, suggesting long storage in a boxroom or garage. Uugh!)

After a lot of unproductive head-scratching, it was decided to replace the recalcitrant IFT with one from a scrap Bush VHF90A which had been in the wars. This transplanting often works well, even at these heady frequencies, especially when the parts are from a known good make. The author used a similar transformer in the IF oscillator units described in "Making waves at 10.7 MHz" in the December 1995 Bulletin. The Bush transformers have the winning advantage that they look similar to, and have the same "footprint" as, the KB ones; the transplant can hence be very discreet no-one need know. After this "operation", the KB's gain seemed a bit improved, but was still not adequate. The importance of following KB's stated alignment procedure was then realised. Viz. it's terribly tempting to assume the IF cores must already be nearly at the right settings already, and to be lazy and not dig out all that nasty old wax and laboriously unscrew them all out, as you're supposed to. On this set though, you *must,* or there's a very real danger of hitting sub-optimum or false resonances. The primaries and secondary settings of the original KB IFT's seem to be interdependent. Although other, better, manufacturer's service sheets dutifully warn you of this when aligning their products, it's seldom actually a problem. But on the KB it definitely is!

Anyhow, having been realigned correctly, the KB finally began to get back on its feet. It was still a bit wobbly, though. It had to be fed from a proper dipole aerial to get anything worth hearing. I didn't even try using the jokey (and crumbling) foil plate antenna... oh, and I live on a hill in a decent VHF reception area; the set is best used in upstairs rooms where reception is often better. The d.c. voltage across the upside-down electrolytic C37, which on normal, sensitive receivers should be -15 to -40V, is bumping along at about -5V. This still produces a reasonable sound, since volume levels are not much dependent on FM signal strength, but there's then no chance for the ratio-detector to do much self-limiting, and, as already noted, there are no other provisions for limiting in the final IF stage either. Thus, the set is vulnerable to external or self-generated amplitude modulation, which may cause unpleasant scratchy distortion, most likely on weaker stations. Programmes which come through well on other sets are struggling to be heard on the MR10. A better set would be pushed firmly into limiting under the same conditions, and would probably give better sound quality.

Having glumly accepted the first MR10's lack of gain, two questions arise: In which stage of the receiver does the shortfall arise? And, can anything be done to improve things? After a lot of testing, the author concluded that the 6BE6 stage was the weak link, as mentioned earlier. It's possible that this valve's performance, "strapped" as a pentode as it is on FM, is not up to the task. Casting around for a pin-compatible, High gain pentode, the author tried an EF95 in place of the 6BE6. No rewiring was required. After realignment of the IF transformers on either side of this new valve, I obtained gratifyingly larger voltages across C37, and the set finally came to life. Unfortunately, the new valve will not function as a mixer on AM, but this test strongly suggests that the 6BE6 is inadequate as an IF amp.

2. Later type ECF 82 fitted

This one was nothing like the first one. Initially, it suffered from what at first seemed to be an intermittent connection, a dry joint, perhaps-which caused FM reception to cut out after about ten minutes. On closer analysis this was actually found to be the entire IF strip periodically bursting into oscillation, and blocking out the required signal. The eerie quieting caused by this huge signal gave one the erroneous impression that the local oscillator or IF strip had died. This time there was a huge voltage across the Upside-Down Electrolytic, yet all was quiet. It was possible to vary the symptoms by critical misalignment of the IF transformers. You could get them tantalisingly close to the correct setting with the strip staying stable, then suddenly it would burst into full horrendous song. The instability seemed to encompass both the ECF82 and 6BJ6 stages, and could only be silenced, (sometimes) by shorting either grid to chassis. (This version of the MR10 is markedly different from the first, having a schematic similar to the earlier version of the NR30 model, and can most clearly be studied on p.137 of the '57-'58 Newnes book). It was eventually found that the strangely-valued C13, decoupling the screen-grid of the ECF82, had gone o/c. This capacitor is apparently valued at 401 pF, would you believe? Weirdly, its failing affected the AM performance not one jot.

With this capacitor replaced, the IF strip was noticeably more stable, but would still oscillate if provoked. Reception still had intermittent quiet moments. The problem could now be predictably induced with gentle heat from a hairdrier. In view of the experiences with the earlier model, all the FM IFT's were opened and examined, but this radio was a lot less mildewed than the first one, and there seemed to be no mould or dry-joints under the cans.

I finally knew I was on to something when I found that shorting the *AM* winding L10 would stabilise the receiver. On opening up this IFT and resoldering its internal connections, and then finally realigning the receiver, the problem was cleared. Again, and incredibly, the AM reception had been completely unfazed the while by all this. After realignment, the receiver's gain was at least respectable, (though not outstanding), and the instability had vanished. The author has talked to other KB sufferers who have had similar symptoms in this and other models.

The moral of all this is to make the IF cans an early port of call on a seemingly duff VHF KB. First check DC continuity, then set up for alignment, ensuring that the stated procedure is exactly followed. Ensure that each core has a recognisable sharp gain peak. If not, be ready to open up the cans for internal inspection and the resoldering of connections. If this doesn't yield an improvement, substitute IFT's from another set. Remember that the AM transformers may develop problems that only affect FM performance.

Moving from IF to RF stage adjustments, we find that the cheese-paring FM front-end design means that RF ganging involves stretching or compressing the end turns on a coil (L3) wound on a resistor R3. Shades of those wax and foam-rubber inductors on seventies FM transistor radios but here, there's the added *frisson* of the coil being live to HT, so watch it! Don't expect anything so sophisticated as the provision of trimmers to adjust at the high-frequency end of the band. If you feel these adjustments are needed, they can only be done by bending components nearer or further from chassis, to add or subtract stray capacitance! What did I tell you?

It is of course mandatory that the valves be in good shape if even half-way decent FM reception is to be got this set needs every bit of gain it can lay its hands on. New 6BJ6's and ECF82's are not as common as the more conventional choices for IF and FC valves, but at least these Brimar bottles retain emission better than Mullard E/UF89's or E/UCH81's. Thus, you may get lucky and find good-emission ones in rummage boxes at swapmeets. The diodes in the EABC80 must also be reasonably balanced for good ratio detector operation.

Both versions of the MR10 have tolerable AM performance, with the second version doing better on LW than the first.

If the HT is low, and the current pull from the HT line is not excessive, (due, perhaps to a leaky coupling capacitor C39), then the bridge rectifier may be defective, having developed a high internal resistance. This will make it feel hot.

Of course, in order to remove the chassis, you have first to remove the knobs, and this may not be as simple as it sounds; the plastic knobs on the white sets can be brittle, and may fracture as you attempt to pull them off. (SET does indeed BREAK KNOBS!) They're as bad as those maddening clear perspex/plastic ones on other fifties radios. (My sympathies to Mr Tempest with his Vidor on p.30 of the Summer Issue). With the KB it's possible to *push* the wave change knob off by applying

"TRADER" SERVICE SHEET
1233

KOLSTER-BRANDES

5-valve A.M./F.M. Table Receiver for Operation from

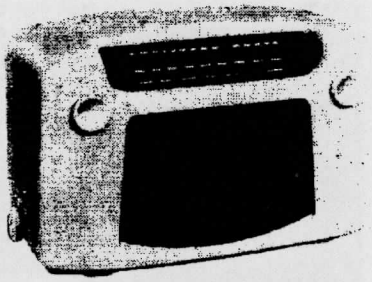

Appearance of the K.-B. MR10.

THE Kolster-Brandes MR10 is a 5-valve (plus metal rectifier) A.M./F.M. table receiver designed to operate from A.C. mains of 200-250V, 50-100 c/s. A ferrite rod aerial is provided for A.M. reception; and a plate aerial for F.M. reception, but provision is also made for the connection of external aerials. The waveband ranges are: A.M., 187-570m and 1,030-2,100m; F.M., 87-100.5 Mc/s.

Release date and original price: September 1955, £15 18s 5d. Purchase tax extra.

CIRCUIT DESCRIPTION

A.M. aerial tuning coils **L8** (M.W.) and **L9** (L.W.) are mounted at opposite ends of a length of ferrite rod to form the A.M. internal aerial.

Provision is made for the connection of an external aerial, which is coupled to the tuned circuits by **C12** and the common impedance of **C13**. Aerial tuning is by **C16**.

V2 (Brimar 6BE6) operates as A.M. frequency changer with cathode-coupled oscillator reaction. Oscillator grid coils **L10** (M.W.) and **L11** (L.W.) are tuned by **C17**. Parallel trimming by **C19** (M.W.) and **C20** (L.W.); series tracking by **C18** (M.W. and L.W.). Reaction coupling from cathode via **L12** (M.W.) and via a tapping on **L11** (L.W.).

V3 (Brimar 6BJ6) is a variable-mu R.F. pentode operating as single-valve A.M. intermediate frequency amplifier with tuned transformer couplings **C25, L15, L16, C26** and **C30, L17, L18, C31.**

A.M. intermediate frequency 422 kc/s.

Diode section **a** of triple diode triode valve **(V4, Brimar EABC80)** functions as A.M. signal detector, and the audio frequency component in its rectified output is developed across volume control **R18**, which operates as A.M. diode load, switch **S12** closing on M.W. and L.W. I.F. filtering by **C32, R17** and the capacitance of the screened leads. The A.F. signal developed across **R18** is passed via **C38** to grid of triode section **d** of **V4** which operates as A.F. amplifier. Bias for **V4d** is obtained from the "contact" potential developed across the high value grid leak **R19**.

D.C. potential developed across **R17, R18** is fed back as bias to **V2** and **V3**, giving automatic gain control on the A.M. bands.

Provision is made for the connection of a gramophone pickup across the volume control via **S14**, which closes in the gram position of the waveband switch control. Switches **S12** and **S13** open in this position, and **S5** closes, to prevent radio break-through.

Resistance-capacitance coupling by **R20, C39** and **R21** between **V4d** and pentode output valve **(V5, Brimar EL84)**. Tone correction in anode circuit by **R23, C44**, and by negative feed-back via **C45, R27, R28** between **T1** secondary winding and **V4d** grid circuit. Variable tone control in **V5** control grid circuit.

H.T. current is supplied by bridge-connected full-wave metal rectifier **(MR1, Westinghouse 18RD2281)**. H.T. smoothing by **R24, R25** and electrolytic capacitors **C40, C41, C42**. Residual hum is neutralized by passing H.T. current through section **a** of the output transformer primary winding.

Operation on F.M.

Co-axial 75Ω F.M. aerial input via fixed-tuned transformer **L1, L2** to earthed-grid triode R.F. amplifier, section **a** of **V1 (Brimar 12AT7)**.

Section **b** of **V1** is a second triode operating as F.M. oscillator/mixer valve with tuned oscillator anode circuit **L5, C9, C10** and reaction coupling from the grid circuit via **L4**.

The amplified output from **V1a** is coupled by R.F. tuned circuit **C2, C3, L3** to **V1b** grid circuit via **C5, C6**, which form two arms of a bridge neutralizing circuit to prevent interaction between the R.F. and oscillator circuits and reduce oscillator radiation. Oscillator tuning by **C10** and R.F. tuning by **C2**, which are parts of the tuning gang.

The I.F. signal in **V1b** output is coupled via I.F. transformer **L6, L7** to **V2, L7** being connected directly in series with **V2** oscillator grid circuit. **V2** then functions as 1st F.M. I.F. amplifier, **S6** then being closed.

F.M. intermediate frequency 10.7 Mc/s.

V3 operates as second I.F. amplifier with tuned transformer couplings **L13, L14** and **L19, L20, L21, C34.**

Diode sections **b** and **c** of **V4** operate in a ratio detector circuit, whose A.F. output is developed across **C33** and fed via **C35** to the

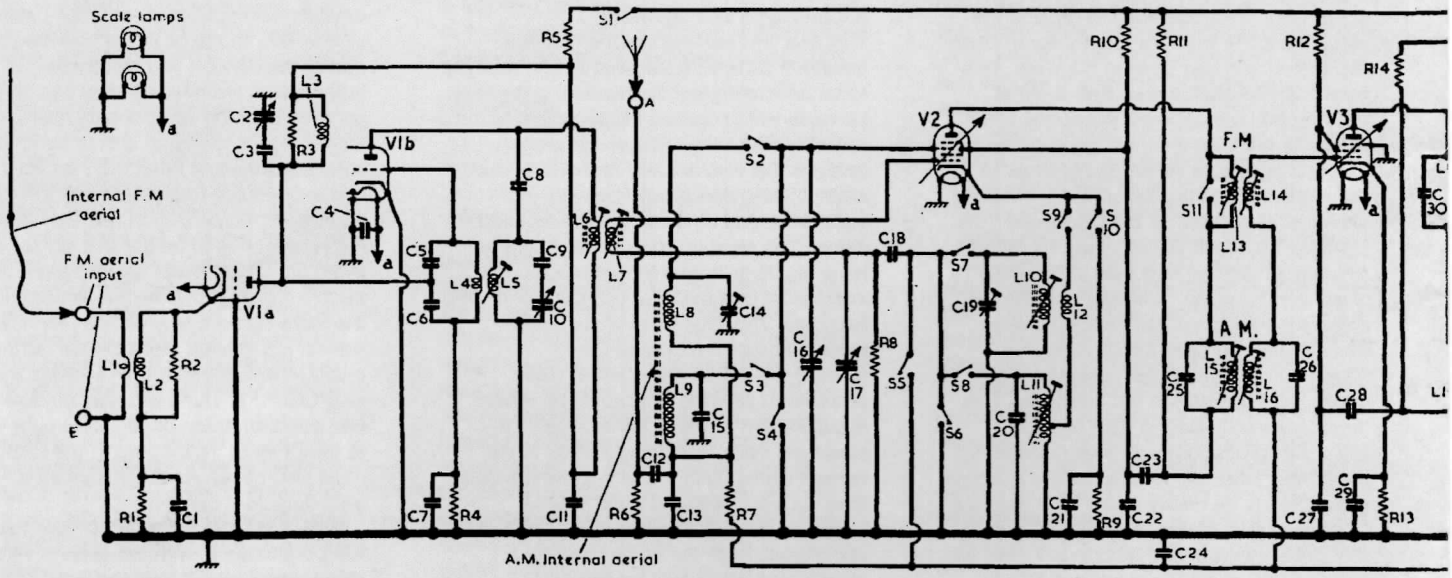

Circuit diagram of the K.-B. MR10. associated resistors **R2** and **R3**, which h the coils. The intermediate frequency the circuit and they are nc

pressure to its collar, which is miraculously accessible from the back of the set. Some white-cased sets have orange knobs resembling catalin, and these may be more robust. Likewise the ordinary brown ones with gold inserts on brown bakelite MR10's.

The Mc Murdo valve holders fitted here are a known troublespot, in any receiver. The sprung twin-jaws which grip each pin may fatigue, causing one of them to break off. This may produce irritating intermittent faults, where a valve has to be precisely positioned in its holder at some drunken angle, to get the set to work. The jaws can usually be individually replaced by unsoldering the tag end and bending the whole metal element straight. This enables it to be withdrawn from the valve holder vertically upwards. A replacement from a salvaged holder can then be dropped in from above and finally bent to shape.

The Sets in Action

We have already seen that the first MR10 is

MR10

A.C. Mains

volume control circuit. Limiting by "flywheel" effect of D.C. reservoir **C37**.

Feed-back in **V2** is neutralized by **C22, C23**, and in **V3** by **C27, C28**, these capacitors forming part of a bridge circuit with the inter-electrode capacitances of the valves.

VALVE ANALYSIS

Valve voltages and currents in the table below are those measured in our sample receiver when it was operating from A.C. mains of 230 V. Readings for **V1** were taken with the receiver switched to F.M., but the remaining readings were taken with the receiver switched to M.W., and tuned to a point at the high wavelength end of the band where there was no signal pick-up.

Voltages were measured on an Avo Electronic Testmeter, and as this instrument has a high internal resistance, allowance should be made for the current drawn by other types of meter. Chassis was the negative connection.

Valves	Anode		Screen		Cath.
	V	mA	V	mA	V
V1 12AT7 a	175	6·8	—	—	1·3
V1 12AT7 b	175	12·0	—	—	—
V2 6BE6	185	3·0	70	7·0	—
V3 6BJ6	190	9·0	100	3·0	0·7
V4 EABC80 a-c	—	—	—	—	—
V4 EABC80 d	65	0·3	—	—	—
V5 EL84	200	40·0	190	4·0	5·0
MR1 18RD2281	185*	—	—	—	225·0†

*A.C. input, measured across winding a on **T2**.
†Measured across **C42**.

COMPONENT VALUES AND LOCATIONS

CAPACITORS		Values	Locations
C1	V1a cath. by-pass	0·001μF	H3
C2	F.M. R.F. tuning	—	A1
C3	F.M. R.F. tuning	40pF	H3
C4	Heater R.F. by-pass	0·001μF	G3
C5	F.M. coupling, R.F. to osc.	20pF	A1
C6	F.M. coupling, R.F. to osc.	10pF	A1
C7	V1b C.G.	5pF	A1
C8	V1b anode coup.	10pF	G3
C9	F.M. osc. tuning	33pF	G3
C10	F.M. osc. tuning	—	A1
C11	H.T. decoupling	0·001μF	G3
C12	A.M. aerial couplers	470pF	H3
C13	A.M. aerial couplers	0·003μF	H3
C14	M.W. aerial trim.	30pF	A1
C15	L.W. aerial trim.	88pF	B1
C16	A.M. aerial tuning	—	A1
C17	A.M. osc. tuning	—	A1
C18	V2 osc. C.G.	410pF	G3
C19	M.W. osc. trim.	30pF	A1
C20	L.W. osc. trim.	300pF	G2
C21	V2 cath. by-pass	0·003μF	G2
C22	H.T. decoup. and V2 neut.	200pF	F3
C23	H.T. decoup. and V2 neut.	0·01μF	F3
C24	A.G.C. decoup.	0·04μF	F3
C25	1st A.M. I.F.T. tuning	88pF	B1
C26	1st A.M. I.F.T. tuning	88pF	B1
C27	H.T. decoup. and V3 neut.	0·003μF	F3
C28	H.T. decoup. and V3 neut.	0·01μF	E3
C29	V3 cath. by-pass	0·003μF	F3
C30	2nd A.M. I.F.T. tuning	88pF	B1
C31	2nd A.M. I.F.T. tuning	88pF	B1
C32	I.F. by-pass	300pF	E3
C33	F.M. A.F. load	300pF	E3
C34	F.M. I.F.T. tuning	40pF	E3
C35	A.F. coupling	0·02μF	F2
C36	I.F. by-pass	0·001μF	E3
C37	D.C. reservoir	2μF	F2
C38	A.F. coupling	0·05μF	E2
C39	A.F. coupling	0·02μF	D2
C40	H.T. smoothing	10μF	C1
C41	H.T. smoothing	20μF	C1
C42	H.T. smoothing	30μF	C1
C43	Part tone control	0·003μF	D3
C44	Tone correction	0·01μF	D2
C45	Neg. feed-back	0·25μF	E2

RESISTORS		Values	Locations
R1	V1a G.B.	150Ω	H3
R2	L2 support	6·8MΩ	G3
R3	L3 support	6·8MΩ	G3
R4	V1 C.G.	22kΩ	A1
R5	V1 H.T. feed	220Ω	G3
R6	A.M. aerial shunt	3·3kΩ	H3
R7	A.G.C. decoupling	220kΩ	B1
R8	V2 C.G.	22kΩ	G3
R9	V2 G.B.	150Ω	G2
R10	V2 H.T. feeds	18kΩ	F3
R11	V2 H.T. feeds	2·2kΩ	F3
R12	V3 S.G. feed	33kΩ	F3
R13	V3 G.B.	68Ω	F3
R14	H.T. feed	2·2kΩ	E3
R15	D.C. load	39kΩ	E3
R16	A.G.C. decoupling	2·2MΩ	F3
R17	I.F. stopper	100kΩ	F3
R18	Volume control	500kΩ	C1
R19	V4d C.G.	10MΩ	E2
R20	V4d anode load	470kΩ	F3
R21	V5 C.G.	680kΩ	D3
R22	Tone control	250kΩ	D2
R23	Tone corrector	4·7kΩ	E3
R24	H.T. smoothing	1kΩ	D3
R25	H.T. smoothing	820Ω	D3
R26	V5 G.B.	100Ω	E2
R27	Neg. feed-back	2·2kΩ	F2
R28	Neg. feed-back	220Ω	F2

OTHER COMPONENTS		Approx. Values (ohms)	Locations
L1	F.M. aerial coupling coils	—	G3
L2	F.M. aerial coupling coils	—	G3
L3	F.M. R.F. coil	—	G3
L4	F.M. oscillator coils	—	A1
L5	F.M. oscillator coils	—	A1
L6	1st F.M. I.F.T. Pri.	1·0	A1
L7	1st F.M. I.F.T. Sec.	1·0	A1
L8	A.M. internal aerial coils	0·5	B1
L9	A.M. internal aerial coils	12·0	B1
L10	A.M. osc. tuning coils	4·0	G2
L11	A.M. osc. tuning coils	5·0	F2
L12	A.M. osc. reaction	0·5	G2
L13	2nd F.M. I.F.T. Pri.	1·5	B1
L14	2nd F.M. I.F.T. Sec.	1·5	B1
L15	1st A.M. I.F.T. Pri.	20·0	B1
L16	1st A.M. I.F.T. Sec.	20·0	B1
L17	2nd A.M. I.F.T. Pri.	20·0	B1
L18	2nd A.M. I.F.T. Sec.	20·0	B1
L19	3rd F.M. I.F.T. Pri.	1·0	C1
L20	3rd F.M. I.F.T. Sec., total	0·5	C1
L21	3rd F.M. I.F.T. Tert.	—	C1
T1	O.P. trans. a	5·0	C1
T1	O.P. trans. b	680·0	C1
T1	O.P. trans. c	—	C1
T2	Mains trans. a	90·0	C1
T2	Mains trans. b	—	C1
T2	Mains trans. c, total	32·0	C1
MR1*	H.T. rectifier 18RD2281	—	E2
S1-S14	Band switches	—	G2
S15	Int. speaker sw.	—	D3
S16, S17	Mains sw., g'd R22	—	D2

*Westinghouse contact-cooled metal rectifier.

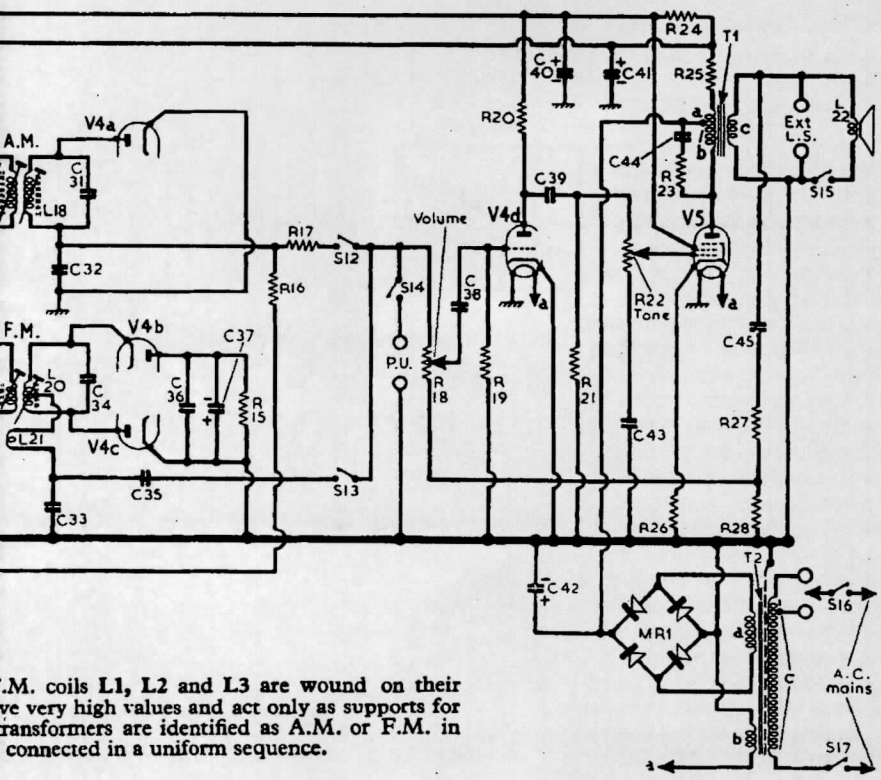

F.M. coils **L1, L2** and **L3** are wound on their ve very high values and act only as supports for ransformers are identified as A.M. or F.M. in connected in a uniform sequence.

Dealers are reminded that if the component numbers given in the accompanying tables are used when ordering replacement parts, it is advisable to mention the fact on the order, as these numbers may differ from those used in the manufacturers' circuit diagram.

best regarded as a mostly ornamental set for occasional AM use only. This radio is profoundly deaf on FM when compared to most of its peers, and this is immediately appreciable just on ordinary listening tests. If one then connects a 95 MHz signal generator to the aerial sockets, and measures the voltage across the Upside-Down electrolytic, one finds that the KB is at least 18-20 dB adrift on gain, compared to Bush, Murphy, or Philips rivals; The second version is an improvement, but is still not in the same league as many contemporaries. It is best used upstairs, in good signal areas, if serious FM reception is contemplated. A proper dipole antenna is required, at a minimum.

Both versions often feel as if on the verge of regeneration, even when correctly aligned. It seems this is necessary to get enough gain. As one tunes through a station, one may hit upon a reception peak that one can't regain if one goes back again. The service data seems to

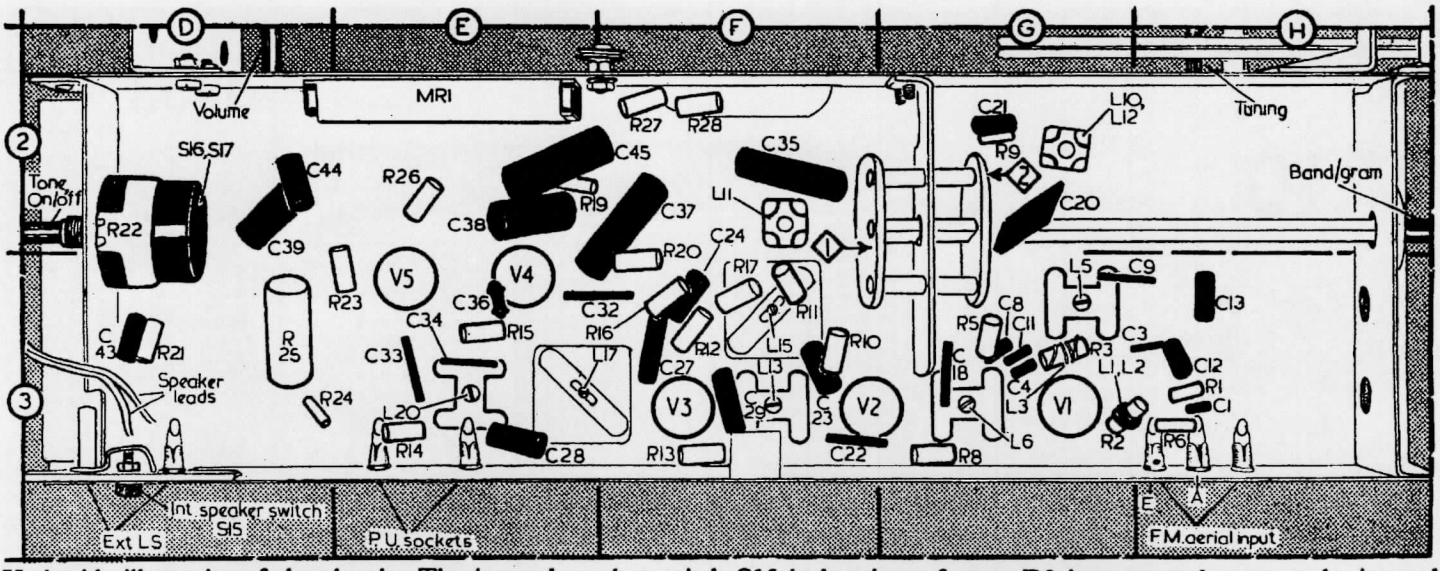

Underside illustration of the chassis. The internal speaker switch S15 in location reference D3 is unscrewed to mute the internal speaker. MR1 in location reference E2 is the full-wave H.T. rectifier. It is cooled by contact with the chassis.

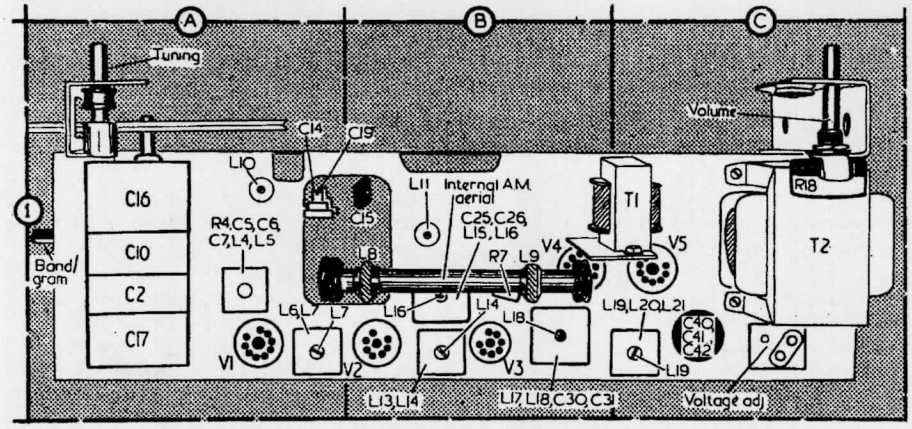

Plan illustration of the chassis showing the A.M. internal aerial coils L8, L9 in location B1.

acknowledge this in cryptic remarks that hint there may be a small positive voltage on the Upside-Down Electrolytic, even in the absence of a signal.

Again, on both versions, the disappointing and indifferent stiff-suspension Goodmans speaker, attached to its cheapo plastic baffle by the horrid spring clips mentioned earlier, doesn't exactly let the music flow, and so, like a number of early VHF receivers, FM reception does not yield much more treble than AM and this, combined with this radio's mediocre RF performance, would have meant it would have spent most of its life switched to AM, the user not seeing (or rather, hearing) any reason to do otherwise.

In the line of duty, and out of curiosity, your author purchased an NR30 "Tri-Fi" for a modest £5 at a swapmeet. The previous owner didn't much care for it, and I could see why; unlike the MR10, this set is not even much of a looker; it's like one of those very tall, very square, early fifties Pyes and, in view of its dodgy pedigree, amply described above, I was fully expecting the worst. Just glancing inside was enough to confirm me in my prejudices; the chassis, (by now, grimly familiar) was this time incongruously suspended from one of the sidewalls of the only-just-strong-enough cabinet, whose flimsiness made some contemporary Philips wood sets seem sound by comparison. The quirky valve line-up was half-heartedly noted, in the glum expectation that this radio would just be a bloated MR10 with 3D pretensions, and with yet another lucky-dip valve choice, bringing with it a new load of vexations...

The set's agreeable performance thus came as a pleasant and unexpected surprise. I came to mock, but stayed..well, to listen. Had KB adopted the higher-gain circuitry deployed here on *all* its AM/FM models, they might have saved themselves a lot of trouble; the Tri-Fi already seemed to work quite well on FM, needing only minor realignment, and its triple speaker system and agreeably well-chosen response tailoring produce a nice big valvey sound. Far from lacking bass, there now seems to be rather too much; it's deep too, but judicious use of the tone control can cut it back. The ungainly square-cut styling at least permits a circular main speaker to be fitted, unlike on most piano-key 3D sets, which had oval ones; this may aid the bass response. It's not too boomy, either, despite the cabinet's shallowness. All this was a revelation after all the problems with the MR10s.

It just goes to show, had Kolster Brandes got their act together after 1955, and produced more SERENADERs, and fewer NARK'D LOSER SETs, the marque might be better regarded today. But perhaps I'm being too hard on them. Does any fellow VHF KB owner have any more encouraging tales to tell? There must be someone out there...

Sharpen up your Reflexes

by Pat Leggatt

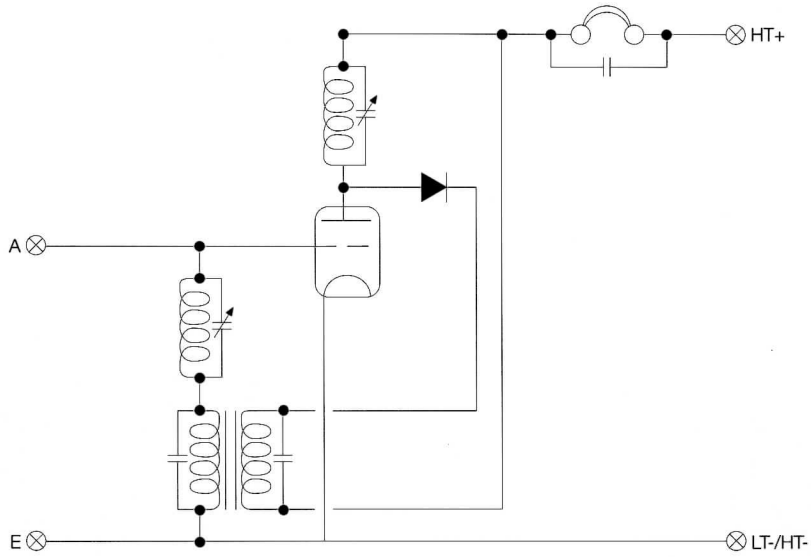

Many designers in the early 1920s refused to be governed by the old adage "two into one won't go". They were taken with the idea that there was no particular reason why a valve should not simultaneously amplify both RF and AF signals, and accordingly they developed the so-called 'reflex circuits' or 'dual amplification' as Scott-Taggart liked to call it.

The technique was invented in Germany in 1913, but the earliest practical example of reflexing that I have come across was the Marconi Company's rather unfortunate application of Captain Round's screen grid valve, the FE1, which he devised in 1920. Round was keenly aware of the unfortunate effects of feedback in a triode through the internal anode-grid capacitance, and he minimised this as far as possible in 1916 with his Q and V24 triode designs in which the anode and grid leads were taken through opposite sides of a cylindrical glass envelope, rather than closely adjacent through a 'pinch' at one end. His next step was to interpose a screening grid between control grid and anode, held at a positive potential so that the electron stream would be accelerated through to the anode, with the result that anode-grid capacitance became vanishingly small. This valve - a 'quadrode' as it was first called - offered high RF gain and almost complete freedom from self-oscillation.

Marconi's, however, seemed blind to the FE1's advantages as an RF amplifier and instead used it in their Type 91 amplifier in a rather eccentric arrangement as a combined triode RF amplifier, diode detector and triode AF amplifier. This did indeed incorporate reflex RF/AF amplification, hence my introductory description of the device.

The Marconi Type 91 amplifier effectively used the valve as what we would now call a diode triode. The filament and the two grids were connected as a triode amplifier for RF amplification, the filament and anode were used as a diode detector suitably biased for anode bend rectification, and the AF output from the detector was fed back to the 'triode' for AF amplification.

I suppose Marconi's were motivated by the economy of using a single valve for all three purposes, and certainly economy was the driving force for the reflex circuits for broadcast receivers a year or two later. To make one valve do the work of two was very attractive in view of the high cost of a valve and reduced load on the HT battery - in terms of today's money a valve cost about £30 plus £5 Marconi royalty, and an HT battery about £40.

Turning to the technicalities of reflexing, there is no reason why a single valve should not simultaneously amplify RF and AF signals: after all, a simple leaky-grid detector does just this, producing detected audio at the grid and quite happily amplifying both this audio for eventual output and the RF for feeding back to the grid for reaction. So, to a first approximation at least, the RF and AF will not interfere with each other inside the valve, but steps must be taken to ensure that they are kept separate in the external circuitry.

The diagram shows a typical reflex circuit illustrating the technique, using a simple triode as was generally the case in early broadcast receivers. The first thing to note is that a separate detector is used - either a crystal or a second valve - since a valve biased for use as a detector is not really suitable as a signal amplifier. The aerial input is fed to the valve grid in the normal way, and the amplified RF appears across the tuned anode circuit: the headphones in series here are shunted by a condenser to provide a path for the RF currents to HT+. The amplified RF is applied to a crystal detector and the AF output from this is fed to the primary of an LF transformer. The secondary of the transformer is connected in series with the bottom end of the aerial tuning coil, the transformer winding being bypassed with a condenser to provide a path to earth for the aerial currents. The audio signal from the LF transformer secondary is thus fed through the tuning coil to the valve grid, and is amplified by the valve. The audio signals at the anode pass readily through the anode tuning coil and through the headphones to HT+.

To sum up, in the aerial tuned circuit the bottom end of the tuning coil is effectively earthed, as far as RF is concerned, by the condenser across the LF transformer secondary and the tuning is unaffected: but the condenser is quite small, so audio signals in the transformer secondary are unaffected. Similarly in the anode circuit the top end of the coil is effectively earthed (actually to HT+) by the condenser across the headphones which is small enough not to affect the audio signals there.

It is perhaps worth mentioning that reflexing and reaction should not be confused. Reaction is an entirely different process whereby the same RF signal is fed back to the grid to reduce grid circuit losses, whereas reflexing involves feeding back a different signal, i.e. audio.

There are of course a number of possible variations. Reaction can be applied round the valve in the usual way; and a valve detector can be used in place of the crystal. Some early broadcast receivers with reflex circuits include the well-known Marconiphone V2, which used a valve detector; the BTH VC valve/crystal set; and the famous Scott-Taggart ST100 using a crystal. A surprisingly late use of reflexing is found in the round Ekco AD65 3-valve (plus rectifier) superhet of 1934, and the AD76 of 1935, in which the IF amplifier valve doubles as an LF stage. Interestingly the same reflexing of a superhet IF stage appears in the 1924 BTH 3-triode portable battery superhet type VR3 Form PA.

So the reflexing arrangement was a fine idea with notable benefits, but were there any difficulties? Well yes there were. Firstly with signals fed back from output to input there was obviously a possibility of instability breaking out. As mentioned, it was important to keep RF and AF signals well separated in the external circuitry, but this was not always easy in manufacturing terms in view of the shortcomings of bypass condensers in early days and because of the necessity for careful component layout and sometimes screening.

Another less obvious difficulty arose from the risk of intermodulation within the valve. Although it is indeed possible for a valve to amplify two different signals simultaneously, independence of the signals will only be complete if the valve characteristic is perfectly linear. If the characteristic is not perfectly linear - and of course it never is - one signal will modulate the other to some degree. For example a large audio signal negative peak could move the working point of the valve down towards the bottom bend where amplification is less, with the result that the RF output to the detector falls and the audio output is reduced to less than expected. This amounts to negative feedback, with consequent reduction of receiver sensitivity. Whether or not this effect occurs depends largely on the phase of the audio signal fed to the valve grid, and sometimes the connections of the LF transformer were such as to produce this undesirable result. The bias on the valve grid should ideally be adjusted to achieve optimum linearity, although set designers generally settled just for returning the valve grid circuit to LT negative.

But overall the economies of reflexing were well worth while and the technique was very popular for several years in the UK. In the more prosperous USA the cost of valves and batteries was less of a problem and reflexing was never used, to my knowledge at any rate.

Collectibles f

by Carl Glover, photography by Mark Groep and Carl Glover

a

b

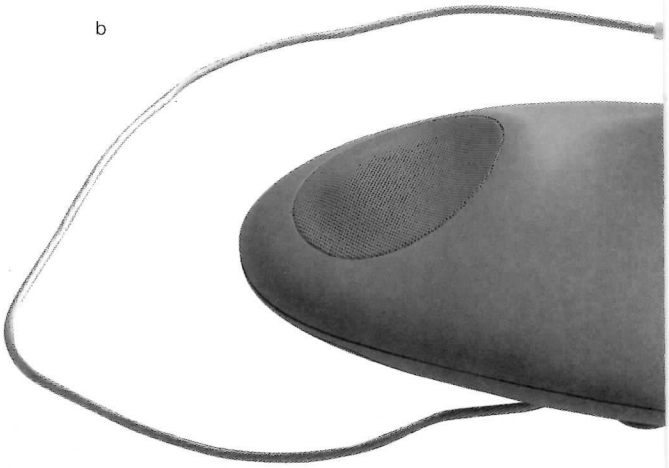

a: 'Moa Moa' designed by Philippe Starck for Telefunken. Bakelite.

b: 'Moosk' designed by Olivet, art direction by Philippe Starck for Thomson/Alessi.

c: 'La La La' designed by Philippe Starck for telefunken. Bakelite.

d: 'Focus' by Lexon, designed by Herve Houplain.

e: 'Apollo' by Lexon, designed by Herve Houplain.

f: Thomson RT 201designed by Philippe Starck.

g: Unknown 1998

h: Radio for Addex, 1998.

i: 'Oyé oyé' art directed by Philippe Starck for Saba.

d

e

g

h

or the future?

c

f

i

'The radio became a mere household machine like the washing-machine and the vacuum-cleaner in a boringly functional garb. The radical changes in technology that came with the invention of the transistor, the microchip, the printed circuit and extreme miniaturisation ousted the large, power-hungry, hot-valve "works" of the old technology. The radio soon got incorporated into stacked music systems in the home and entirely lost its original character and separate identity.'

Robert Hawes: Bakelite Radios, Apple publishing, 1996 isbn 1-85076-622-3

In the last few years our trusty companion the radio is showing signs of a resurgence as a vital piece of design found lurking around many contemporary homes. At least two of these new radios are even manufactured in that wonderful material — bakelite.

Soundwise most of the current radios are reasonable FM sets that offer nothing out of the ordinary other than their appearance. Mainly European in origin (especially France) these striking radios are often found in up-market accessory retailers such as London's Conran Shop and its many continental equivalents. In fact I almost singularly pick these things up whilst on holiday in Paris or Brussels.

Originally I was a bit horrified when first encountering these sets but warmed to them after realising that there were at last some radios that typified '90's design: can you think of any that were symbolic of the 1980's that didn't involve some form of 'retro styling'? I guess the fact that there are quite a few of these pieces around now makes them rather easy to collect if one should be so inclined. It makes a change buying radios in the same year that they come out, but none of them seem to have been made in any great numbers, with the possible exception of Trevor Bayliss' clockwork radio which is now available in several translucent colours and even a transparent model exists. The world-famous French designer Philippe Starck is responsible for the appearance of a large number of radios reproduced on these pages, he has also designed quite a few unusual televisions too.

If you don't mind parting with the odd remainder of holiday money before returning back home and you happen to be one of those stylish gadget-shops, you could do a lot worse than buy one of these strange-looking beasties.

National Vintage Commun

photography by Jonathan Hill

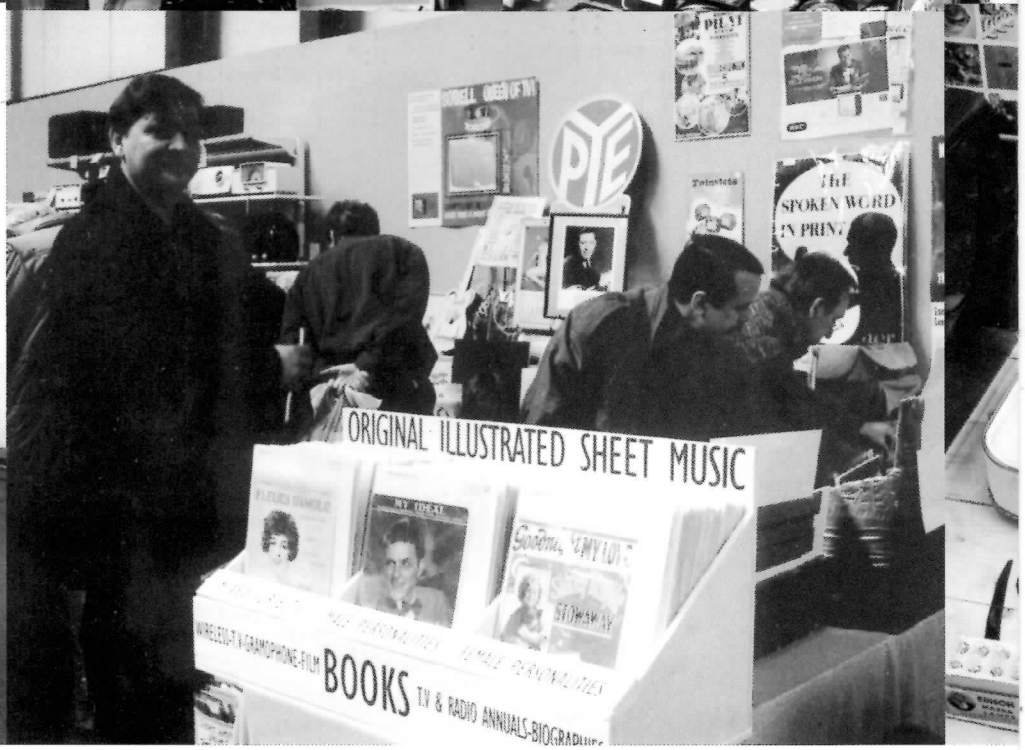

cations Fair 8th May 1999

Restoring the Marconi 296

by Reg Poole

I have several 30's Radio receivers in my collection, all restored to full working order. Not one of them had the dreaded condenser block until I acquired the Marconi 296 illustrated in Radio Radio fig 440. This particular model was in excellent condition, no woodworm or rust, original valves and below chassis untouched since manufacture. Obviously produced at a time when the work force took a pride in their work. I decided a photograph was appropriate.

A few tests with the ohm meter verified continuity through the field winding, output and mains transformers. A mains test with valves removed produced the expected A.C. voltages. A variable DC applied between H.T. and chassis produced some heavy leakage currents. Electrolytics each took 5 ma at 200v and the remainder leaked 14 ma at a mere 125v. The electrolytics and the condenser block had to be replaced if the set was ever going to work again.

To an amateur who has never before seen the under side of a 296 this seems a formidable if not an impossible task without a service sheet. I found some expert advice in BVWS bulletin of December 1995, "A set for all seasons" by Gerry Wells and Carl Glover. I read this article carefully and Gerry's description fits the 296 perfectly. All I needed now was a service sheer and the Trader service sheet 521 covers the Marconi 296 and 289 as well as the HMV 442, 443, 570 and 570A. Once this was acquired I could get on with the serious work. studying the circuit diagram text and condenser diagram I found discrepancies with the receiver itself. The wiring colour code did not match as most of it is varying shades of dirty brown and lead outs from the condenser block were in different places to those indicated.

First job was to make a full sized drawing of the resistance boards with all tag connections to the wiring harness, noting the recognisable black leads as chassis connections, verified with an ohm meter. The object was to replace resistances and harness to their original positions without relying on memory.

The following repair description is from notes I made at the time. I have constantly referred to chassis layout and condenser block diagrams. An exercise requiring very little technical knowledge.

First drill out rivets holding tag strips to block casing and remove screw holding C13.

Unsolder or snip off one end of the 8 resistors where connected to the single tag strip and bend up exposing lead outs from block. Snip these off. Also snip the lead that passes from C38 at the front of the chassis over the block and down to the PX4 grid pin. The single tag strip can now be bent up on the harness.

The same procedure applies to the larger tag board except that 4four harness connections at one end and one at the other have to be unsoldered to allow the board with all the resistors to be bent up. Possibly inserting a screwdriver to persuade rivet remnants to give way.

Beneath the tag strips is a thin sheet of

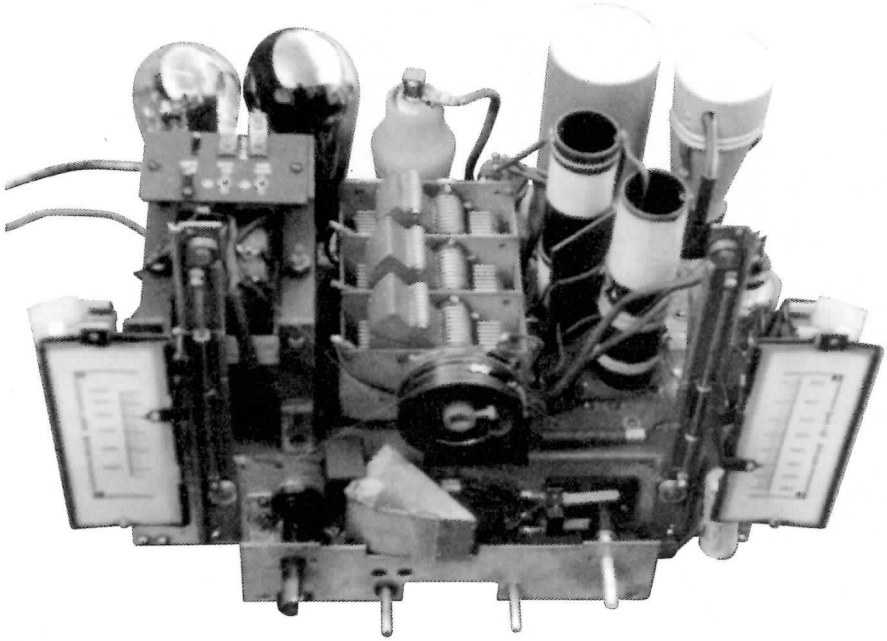

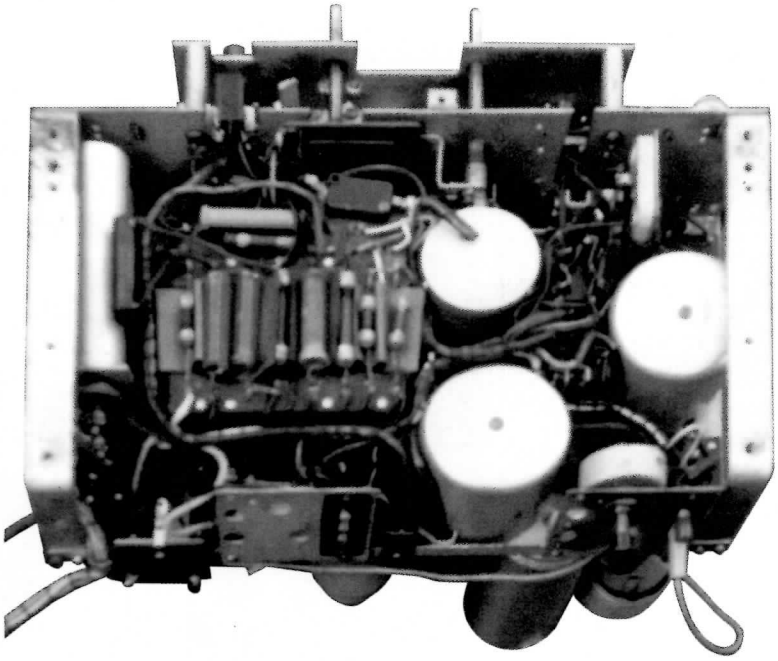

Diagram showing the connections of the condenser block. It is drawn as seen when viewed from the rear of the underside of the chassis, and is so indicated in our under-chassis view.

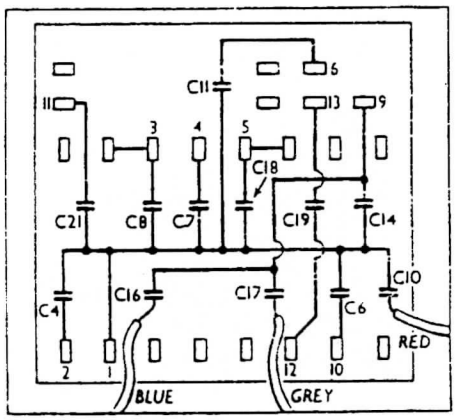

Top: Marconi 296 chassis

Above: Below chassis untouched since manufacture

Top right: After repair
Top far right: Gerald Wells with HMV chassis displaying condenser block

Right: Completely restored

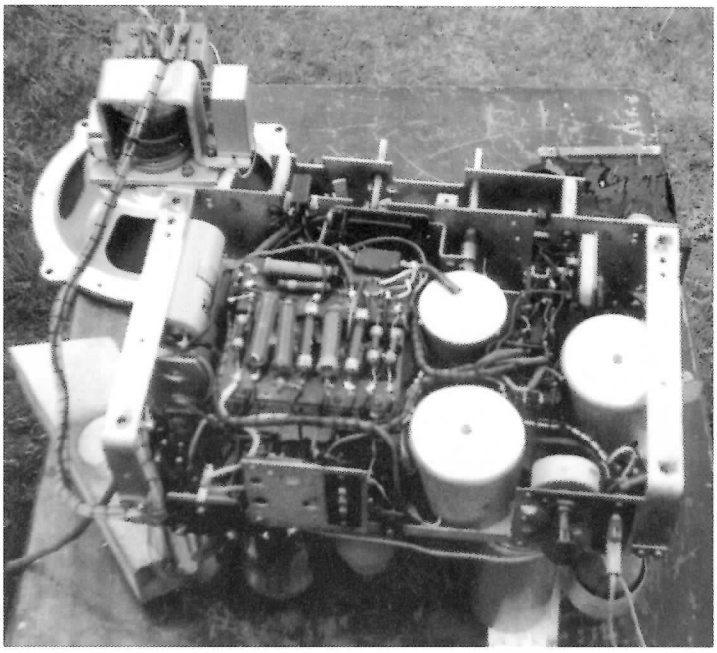

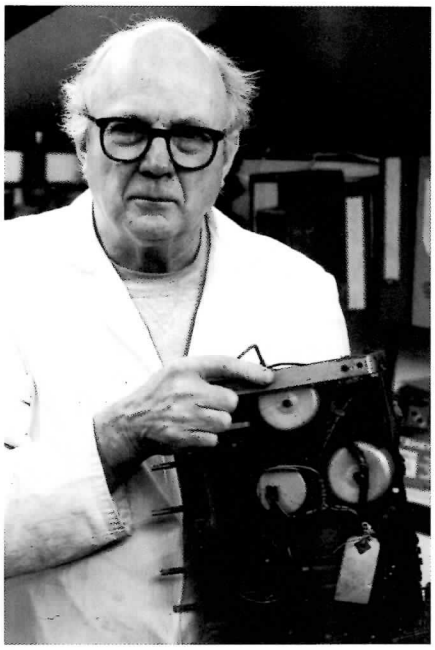

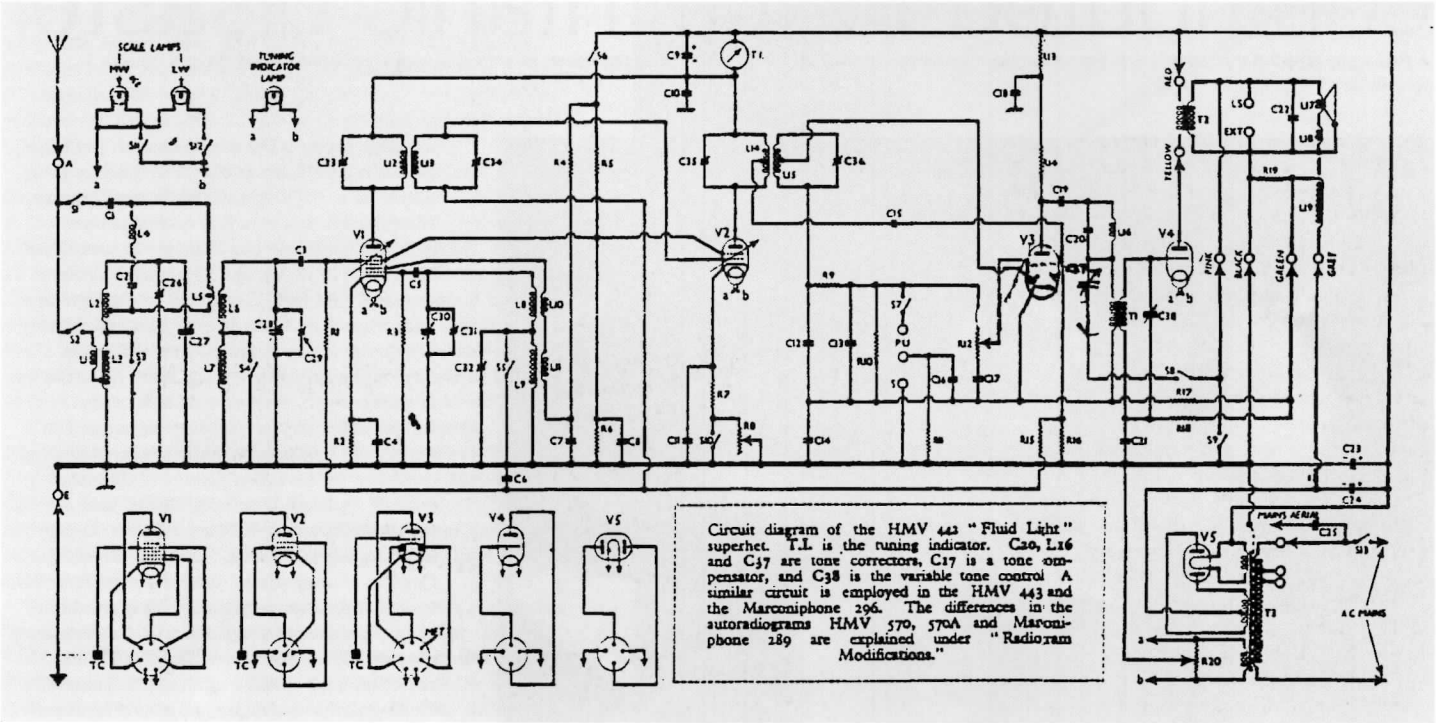

Circuit diagram of the HMV 442 "Fluid Light" superhet. T.I. is the tuning indicator. C20, L16 and C37 are tone correctors, C17 is a tone compensator, and C38 is the variable tone control. A similar circuit is employed in the HMV 443 and the Marconiphone 296. The differences in the autoradiograms HMV 570, 570A and Marconiphone 289 are explained under "Radiogram Modifications."

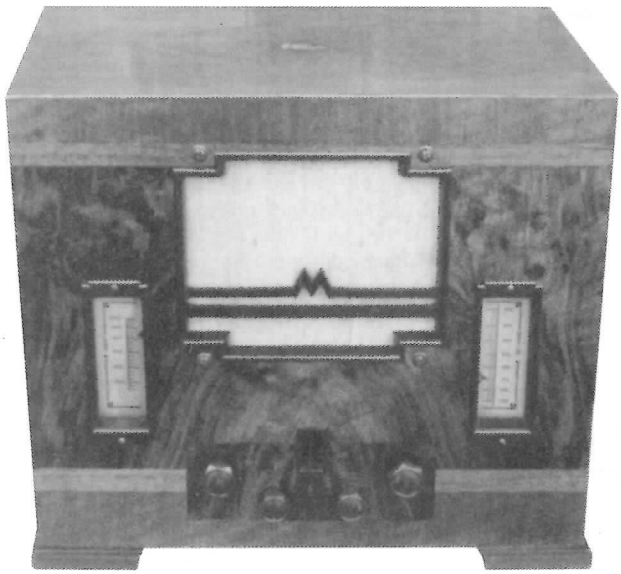

paxolin with a large hole to allow block leads to pass through to the tags. This sheet is easily broken. I made up a duplicate from perspex material suitably drilled and tapped 6 BA using the original as template.

After removing mounting screws the block can be carefully lifted out. Clean out rivet swarf with a vacuum cleaner.

At this point I decided against Gerry Wells' time consuming and messy method of dealing with the condenser block and left it out altogether.

I fitted an earth bus-bar with a couple of solder tags between two of the block mounting holes. Solder one end of each replacement condenser to this, working from left to right in the order shown on the block diagram; nine in all, plus three earth leads about 4" long to connect with black leads from the harness.

Reconnect the lead from C38 to PX4 below tag strips. Connect c10 to the lead

continued on page 18

that goes to the second I.F.T. - one of the few E.M.I. forgot to put in harness and marked RED on the diagram but appears dirty brown.

Connect C16 to lead from P.U. socket and C17 to lead from bottom end of volume control R12. The other end of both condensers go to tag 9 after replacing the paxolin/perspex frame and pressing down tag boards to their original position fixed with 6 BA screws through rivet holes.

Referring to the block diagram, connect replacement condenser lead out wires to their respective tags using sleeving as necessary and connect earth leads to the harness black lead tags.
Connect C19 between tags 12 and 13.

Reconnect the 5 harness leads to the larger tag board and fit C13 with 6BA screw.

Finally reconnect the 8 resistors to their original tags and check all connections to ensure that none have accidentally broken - job done.

I replaced both leaky electrolytics, refitted the valves, plugged into the mains and switched on - marvellous! it works. Just a squirt of WD4O on the volume control and a minor adjustment of the aerial trimmer was all it needed.

I notice an unusual method of feeding A.F. from the detector to the triode grid. Grid bias is achieved from the potential across the diode load R10. I wasn't aware that the MHD4 had variable mu characteristics. However, the final result sounds good, so who am I to criticise?

The Wireless Failures that contributed to the Titanic disaster

A Paper presented at the 1999 British Titanic Society Convention at the Hilton Hotel, Southampton.Based on evidence contained in the Titanic Signals Archive
by John Booth

The information which forms the basis of this article is based on evidence taken from some 450 wireless telegrams relating to the disaster which I had the great good fortune to purchase some 12 years ago. As such, they provide a factual overview of the crucial part played by wireless in the tragedy.

Guglielmo Marconi (the second G is silent) was the son of an Italian father and an Irish mother whose family connections include the still surviving Jameson Family and their brand of Irish Whiskey. Marconi was educated at Leghorn under Professor Rosa and continued his studies at Bologna University. His early studies were in the field of chemistry, but his interest in electricity led to his early experiments in the field of wireless.

From Italy he came to England, testing his experiments between Penarth and Weston. The great breakthrough came with his transmission of the Morse letter S in December, 1901 to the Marconi receiving station at Cape Race, Newfoundland, by which time he had taken out a patent (in 1896) for the transmission of Morse code by means of electromagnetic waves or impulses.

In addition to his inventive genius, Marconi developed a keen eye for business and for the people and personalities who enabled him to develop his rapidly expanding empire on international lines. In 1910 Godfrey Isaacs, a brilliant lawyer, whose brother was Attorney General, was brought in to manage the business side of Marconi's affairs.

Anyone, reading the disclaimer on the back of a telegram form of the time, can be in no doubt as to its origin. It reads, and I quote: "Conditions under which messages are accepted. Neither the Marconi International Marine Communication Company Limited, nor any Telegraph Company or Government Telegraph Administration or other Company or person whatsoever concerned in the forwarding of this telegram shall be liable for any loss, injury or damage, from non-transmission or non delivery or neglect in relation to this telegram, or delay, or error, or omission in the transmission or delivery thereof, through whatever cause such transmission, non delivery, neglect, delay, error, or omission shall have occurred. The Company reserves to itself the right to refuse to transmit any message. Having read the above conditions I request that this telegram may be forwarded according to the said conditions by which I agree to be bound." There follows the signature and address of the sender.

The form also carries a coloured illustration in red ink of an advertisement for the new Selfridge Store in Oxford Street: 'Open to the Public in March 1909.' I am indebted to the archivist at Selfridges for the likely reason why Marconi allowed this advertisement to appear on the backs of telegrams.

It appears that early transmissions by the Marconi Company upset the War Office. In discussing the problem with Gordon Selfridge, Selfridge suggested to Marconi that the aerials be moved to the top of his new store in Oxford Street. Mr Marconi was thus allowed to undertake his transmissions in peace and Mr Selfridge was rewarded on the basis of a 'quid pro quo' by having his new store advertised on the backs of Marconigrams!

By the early nineteen hundreds Marconi's unique method of communication was in use by both the British and Italian navies. Still a relatively small force in 1912, Marconi wireless operators were recruited from among ambitious young men who were sent

MIMCC 5

Forwarding Charges _____ *Delivered or sent date* Apl 15th 12

SERVICE FORM.

THE MARCONI INTERNATIONAL MARINE COMMUNICATION Co., Ltd.

Office Rec'd from	Time Rec'd.	By whom Received	Office sent to	Time Sent	By whom Sent
MGY.	m.		MLB.	5 10 a.m.	

No. 1 **OFFICE** Apl 15 1912.

Prefix CQ **Code** _____ **Words** _____

From Titanic **To** CQD

Position 41.46 N
50.14 W require
assistance struck
iceberg

No. 1a.

MARCONI WIRELESS TELEGRAPH COMPANY OF CANADA, Limited

MONTREAL

No. 5 CAMPERDOWN *STATION* APR 17 1912 *19*

Prefix S *Code* _____ *Words* 18.

Office of Origin MPA

Service Instructions: Via MPA

Via C.P.R.

Station Rec'd from	Time Rec'd	By whom Rec'd
SN	7 44 p.m.	W

Stations sent to	Time Sent	By whom sent
MA	5 p.m.	MA

To Telefrank New York.

deeply	regret	advise	you	titanic
sank	this	morning	after	collision
iceberg	resulting	serious	loss	life
further	particulars	later		
			Bruce	Bmay

to the Marconi Training School in Liverpool for a six month period to study the theory and practice of wireless telegraphy, leading to a certificate of wireless proficiency. In October 1911, The Marconigraph (a Marconi owned wireless magazine) answered readers' questions about wireless as a career and addressed any prospective applicant: "Let him not for one moment suppose that in the operating side of wireless telegraphy he has discovered an El Dorado; but without painting an alluring picture, let me unhesitatingly say that the attractions and remunerations are such as to make a favourable bid for entry of capable and zealous young men."

The article warns off any applicant with: "An exaggerated notion of his own individual importance." Perhaps conscious that while the company wanted assiduous young clerks, the appeal for a career as a Marconi operator was travel, independence, a glamourous sounding job and a sense of being part of a new and exciting technology.

Lessons began with a study of the elementary principles of electricity, magnetism and wireless telegraphy. After which, students were required to learn the use and repair of various kinds of apparatus, an important skill aboard ship where the Marconi operator would be solely responsible for the installation.

Equipment and staff were imported onto ships by the Marconi Company, creating a sense of distance from the rest of the crew. As such, the working of wireless could remain an unfamiliar area to ship's officers, who largely left operators to their own devices.

In terms of the day-to-day running of the ship, this left the wireless as an additional and, perhaps, optional, form of assistance, rather than an integral and vital source of information. Captains, such as E. J. Smith, of the Titanic, had commanded ships for decades without the benefit of wireless. Prior to the sinking of the Titanic, one wonders what importance seamen of his generation placed on wireless and how many understood the services which it offered. Other than as a handy, recently introduced gimmick, it was, in their minds, perhaps, available only as a device to those wealthy passengers who could afford to use it.

Bearing in mind that the Marconi International Marine Communication Company had been established some 12 short years before the Titanic Disaster of 1912, only 400 of the 20,000 British registered ships were equipped with wireless.

Furthermore, the introduction of this new method of communication posed a serious threat to cable companies. The laying, repair and maintenance of underwater cables simply could not compete with Marconi's new system of 'wires without wires', the magazine "Vanity Fair" comparing the effect on shareholders in cable companies "With the personal certainty of chickens under a hawk".

The introduction of Marconi's system for marine use involved an enormous amount of expenditure and international co-operation to establish Marconi stations in Britain and overseas, each with its own special call letters. Like the shore stations, each individual ship was provided with its own call sign. British vessels were pre-fixed with the letter M., eg MGY for the Titanic. For American vessels, the letter N was used and for German vessels, the letter D. Marconi

continued on page 20

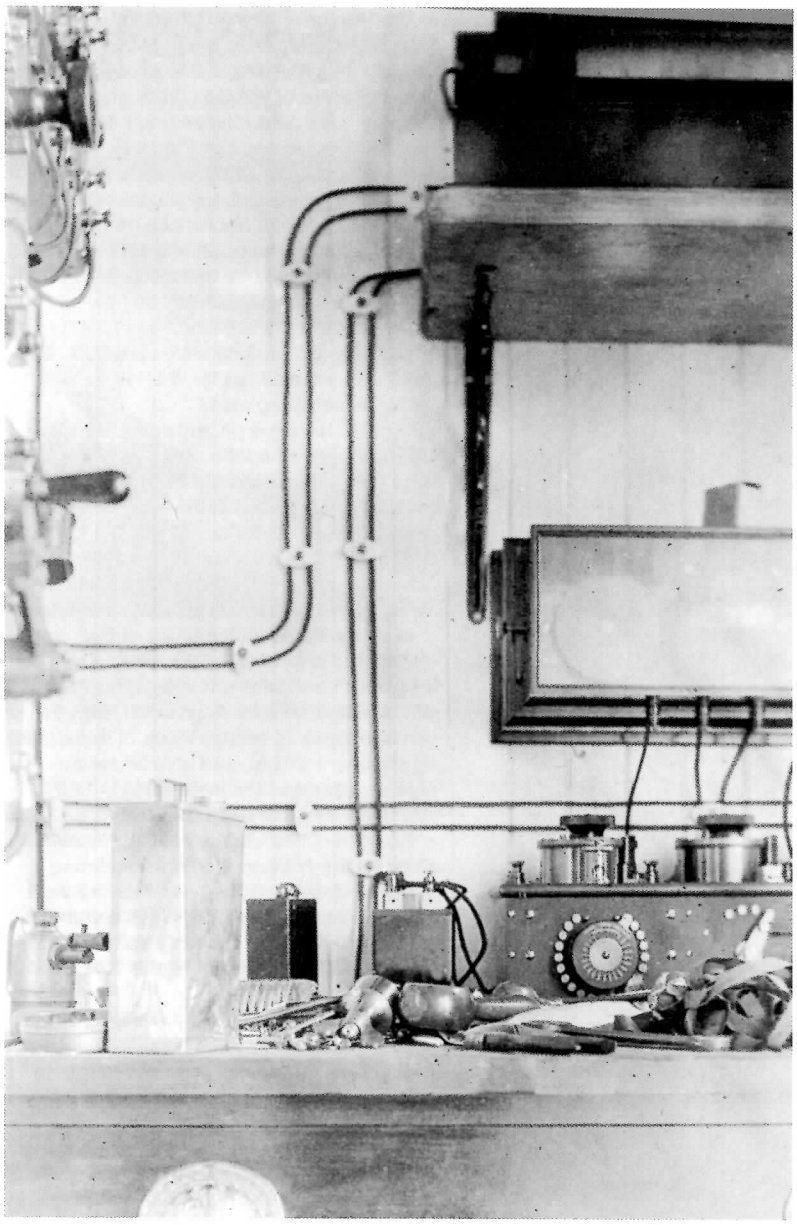

Sending a Wireless Message. 125.

Wireless cabins contemporary to the time of the Titanic disaster

also introduced the letters CQD as the standard distress call, later replaced in 1906 by international agreement when it was changed to SOS.

On board ship, a variety of prefixes were in use, but by far the most important were telegrams prefixed with the letters MSG, which indicated a Master Service Message sent by one ship's Captain to his opposite number on another vessel. Under the regulations then in force, all such telegrams had to be personally acknowledged by the receiving ship's Captain.

From a study of the telegrams on display relating to the ice-messages received by the Titanic it will be observed that all but two, the AMERIKA telegram and the one sent by the MESABA, carried the vital MSG prefix. In the case of the AMERIKA, (a German vessel) the prefix was wrongly transmitted or transcribed as MXG. The MESABA message sent by operator Stanley Adams, and a similar warning sent the following day, both FAILED TO CARRY THE VITAL MSG PREFIX. The former telegram warning the Titanic that she was heading directly for a massive ice-field, although acknowledged by the Titanic, was never delivered to the bridge because of the omission.

A direct order from Captain Lord of the CALIFORNIAN to his operator, Cyril Evans, to inform the Titanic that they were stopped and surrounded by ice was transmitted by Evans in a somewhat flippant manner. Probably because of its failure to carry the essential MSG prefix received a sharp rebuttal from Senior operator, Phillips, on the Titanic, busy with a mountain of personal passenger telegrams for the Marconi station at Cape Race.

With the vast number of icebergs that Captain Rostron encountered in his efforts to save survivors, one can only speculate whether these two vital warnings of ice would have alerted the Titanic to the danger of the massive ice field ahead and thus prevented the tragedy.

Rostron later commented:- "Stretching as far as the eye could reach were masses of icebergs. I instructed a junior officer to go to the wheel house deck and count them. There were twenty five over two hundred feet in height and dozens ranging from a hundred and fifty down to fifty feet. For nearly four hours we sailed around this pack - quite fifty to sixty miles. Then we were clear and could set our course for New York."

Conclusions

At the British Enquiry into the disaster, Lord Mersey and his panel of assessors asked for an explanation as to the meaning of the letters MSG. They clearly failed to notice that Adams the wireless operator of the MESABA had not used this Master Service code when he was examined some time later in the proceedings.

Adams must have known the reason why his fateful ice-warning never reached Captain Smith. Both he and Evans of the CALIFORNIAN were equally culpable in their failure to follow the strictly laid down Company regulations that might well have averted disaster.

During the voyage no less than seven ice warnings were received by the Titanic's wireless room. If, as was stated at the British Enquiry, the ice telegrams were posted in the Chart-room, it seems remarkable that in his evidence to the Enquiry, 2nd Officer Lightoller could only recall personal knowledge of two.

It is evident from Captain Rostron's account of the massive ice field and the large number of 'bergs encountered, that such vast quantities of ice had never before been encountered on the Southern track.

It seems incredible that the repeated warnings of the ice danger apparently failed to alert the Titanic's officers to the danger which resulted in the tragic loss of some 1,500 souls in the North Atlantic 87 years ago.

Some Characters I have met

by Bill Smith

In the early post war years before apprenticeships and day release courses became commonplace, the radio trade found it almost impossible to acquire suitably qualified service engineers, and were forced to enlist the services of ex-servicemen and similar personnel who had some radio knowledge. It was generally left to me as Service Manager to vet such candidates and give them a test of sorts to ascertain their abilities, so I was rather miffed when, without prior consultation, my employer presented Percival as the latest recruit to the workshop. My employer could see that I was not best amused and drawing me aside he assured me that Percy would be a great acquisition to the staff, as he knew 'simply everything about radio'. Sure enough Percy was found to be a fountain of knowledge and would trot out theory at a drop of a hat. Sadly though, he didn't perform very well on the bench and in fact he proved to be something of a liability. Being a bit of a softy I took pity on him and helped him out for a spell. However when he made a point of telling me at great length how the fault had been traced after I had fixed it, I thought, "Blow you my man", and left him more-or-less to his own devices. Naturally I had to report matters regarding 'Mr Fix-it' to my boss but he, as I expected, was reluctant to accept responsibility and said to give Percy a little more time to settle down. However, it soon became apparent from Percy's time sheets that he was not pulling his weight and my employer was forced to let him go... I like that last bit... much kinder than saying **"YOU'RE FIRED!"**

Then there was young Kenny who came to us from another firm and did not appear to be seriously interested in the radio trade. However, as he was a willing, happy-go-lucky lad who made a lovely cup of tea, I was willing to be patient with him. I happened to be working on a rather tricky fault at the time and had run out of ideas and in a moment of inspiration I passed it on to Kenny with the idea of keeping him occupied for a spell with meter and scope. Imagine my surprise and disbelief when after some ten minutes or so Kenny appeared at my elbow with "I've fixed it!" and on going over to his bench it was evident that Kenny had indeed performed a minor miracle. What did you do?" I asked in amazement. "Oh! I changed that condenser there", said he pointing. "But how did you know it was that one?" I further asked, to which he rejoined "I dunno, I just did!" Whether it was luck, intuition, or sixth sense, it soon became apparent that our Ken was possessed of a rare talent, and was seldom proved to be wrong in his diagnoses. I often thought of Kenny in later years and sometimes wondered if in fact he was way ahead of us and was merely having us on. However I never had the chance to find out because when he became old enough Kenny surprised us by leaving to join the Prison service as a Warder. Subsequently he paid us a visit and when I asked him how he was getting on he said "First class" and then added, "It's better than working!"

Sam, on the other hand was another kettle of fish entirely. Sam was a Merchant Navy Radio Officer who had a fixation about IF frequency alignment. I first made his acquaintance when he retired from the sea and bought a Ferguson radio from us. A couple of days later he appeared at the shop demanding to see who ever was in charge of the service department. On enquiring what his problem was he informed me with great conviction that the IF alignment was 'away out' in his newly acquired radio. I said that this was rather unlikely, and hadn't he

insisted that he have one straight from the store and in a sealed carton? However, in an effort to smooth matters I agreed to check the alignment, which turned out to be perfect in every respect. Again Sam returned and insisted that he knew about these things and that the alignment was incorrect. Finally, in desperation I loaned him our signal generator so that he could check it out for himself at home. Sam lived with his elderly father in a small cottage on a hill overlooking the town and I remember calling to collect the signal generator and being ushered in to meet his parent. Sam informed me that "He had finally fixed the alignment" and, tongue in cheek I said "Oh Yes!" and prepared to leave. "Show him your machine", his obviously doting parent croaked from his chair close by the roaring fire. "You must see what my son has brought back from his last trip on the Queen Elizabeth". Sam duly appeared with a contraption resembling one of those 'shocking coils', only this one was complete with neons and all manner of fitments... even a comb to encourage hair to grow on your scalp (As my hairline was beginning to recede I must admit to being interested in this particular one!) Sam was now in full flight and had sparks emanating from everywhere. His old toothless Dad sat there clapping his mittened hands with obvious glee while his prodigal son performed these masterly feats. I made good my departure while Sam executed his coupe de grace with a shower of sparks up the chimney.

Imagine my horror some months later when my boss turned up with Sam in tow and informed me that this experienced engineer was to help out by doing the radio repairs... will he ever learn! However Sam got stuck in and his efforts left me free to concentrate on the TV repairs. Apart from his obsession with IF stages and his annoying habit of calling me over to his bench with a hail of "One moment Bill!" whereupon I would find myself involved with his problem, Sam seemed to be a quiet enough fellow. He had a fund of stories concerning his life on the ocean wave..., some of which were pretty lurid and somewhat lavatorial in content. One of them, concerning shore leave in a French port, springs to mind. On this particular occasion Sam and his mates (as sailors do) were doing their rounds of the various hostelries when Sam had need to pay a visit to the toilet. Most of you will no doubt be familiar with those 'hole in the floor' contrivances peculiar to that country, and will perhaps hazard a guess as to what next transpired. As Sam crouched over this orifice in great concentration his wallet dropped from his hip pocket and disappeared into the murky lower reaches. I will not elaborate on Sam's efforts to retrieve his valuables, except to say that Sam left nothing to the imagination and indeed reached parts where none have dared go before!

Sam sported a tremendous beer belly and I recall him turning out for the firm's annual ball looking quite slim and 'sergeant majorish', his pot now being transferred to his chest! We all assumed that he was wearing some sort of male corset and as the evening progressed, by his now florid appearance it became obvious that Sam was in some distress. He collapsed later on the dance floor and had to be revived, and although some blamed the drink for his condition I think that the tight corset had much to do with it.

As the months went by however it became obvious at work that Sam had a problem... namely the 'Demon Drink'. I had noticed that he began to get rather belligerent after lunch and would appear with tell-tell signs of a green, paste-like substance drooling from his lips. This was the result of those 'Amplex' tablets, which were around at the time, which were purported to disguise the smell of alcohol. We all naturally tried to turn a blind eye to Sam's shortcomings, as he was a bit

continued on page 25

Wireless and the car, then and now

Thoughts for car radio enthusiasts by Andrew Emmerson

"No modern book on motoring would be complete without mentioning the possibilities of wireless connexion with the motor-car."

That's what Harold Pemberton wrote in his book Motor Do's and Don't's, published by Methuen in 1924. He continues:

"The motor-car can of course be used as a means of conveying your ordinary wireless set to a desirable spot where you can listen-in, or you can convert your car into a 'wireless car' ".

"It is not always feasible to use an ordinary wireless set for listening-in while the car is running. For this purpose a special form of aerial is an advantage, and it is also wise to insulate your wireless set against the bad influences of the magneto and the sparking plugs. Unless these are properly insulated satisfactory results cannot be expected."

"For some years the Marconi Company has been experimenting with a view to discovering the most satisfactory means for protecting the wireless set against the influence of the car's ignition. The problem has now been solved. For the information in this article I am indebted to the motor wireless expert of the Marconi Company, who personally assisted in the conducting of these experiments."

"I have myself listened-in to some very delightful concerts while travelling at forty miles per hour or more on the open road. On a long and tiring journey, such as a run to Scotland, listening-in is a very delightful interlude. You should, for satisfactory results, have an instrument with a range of at least fifty miles. This will enable you, on a journey, say, to Scotland, to be within reach, practically the whole way, of at least one of the Broadcasting Stations."

"The Marconi Company have found that the most satisfactory wireless instrument is an eight-valve set. The best type of aerial for both closed and open cars is an elevated plate, that is, a sheet of metal slung as high as possible above the car. In a closed car this sheet of metal can be built into the roof, hung on top of the roof, or slung over the roof."

"In the case of the open car it can be fixed to the hood and arranged to close and open with the hood. A frame aerial is possible, but the principal objection to it is that on the open road a motor-car is constantly changing direction. This means that the direction of the aerial has also to be constantly changed."

"For insulating the magneto, special metal boxes can be obtained which fit over the magneto, and the wire leads to the magneto. Special insulated sparking plugs can also be obtained. The motor wireless set should have the least possible number of controls. In the case of closed cars a good position for the set is under the driver's seat. The switchboard and the telephone receivers can be fitted into a panel inside the car. With the Marconi motor wireless set the control consists of only one handle."

"The objection to a three-or four-valve set is that such instruments need very delicate operation-not an easy matter when travelling over bumpy roads. It is advisable to have special batteries for the wireless set. The ordinary battery on your car has sufficient work to do without putting this extra strain on it. If your car is fitted with a dynamo, a silencer should be obtained, which cuts out any electrical noise. While the dynamo may appear perfectly silent, unless it is new and in irreproachable condition, it will probably set up electrical noises which will disturb the efficient working of your wireless set."

"From the above it will be seen that for really good results on a motor-car travelling at speed, the best possible instrument is required. There is no reason, however, why the amateur should not experiment with a cheaper set."

Technology has moved on since then and so has the business of collecting and restoring car radio. Most of the vintage sets sold today go to 'serious' car enthusiasts aiming to equip their cherished classics. Whilst some owners are happy enough with a 'generic' radio, others insist on the specially branded models unique to their particular marque and car.

Sets are either valve or solid-state, according to the age of the car; some of the latter were made to be removable (being portable sets that plugged into a special cradle below the dashboard). There were also some transistor portables made in the mid-1960s such as the Ultra Road ranger; this had a car aerial socket and a switch to select either this aerial or an internal ferrite rod. Relatively scarce and now quite collectable are the eight-track cartridge players and the in-car record players that somehow managed to hold and play a 45rpm single disc.

Radio repair skills are relatively uncommon among car enthusiasts and some of them are perfectly happy to gut an old valve set and stuff a solid-state chassis inside. Others insist on originality, a solid-state vibrator being the only substitute allowed.

Values for the more sought-after sets are rising rapidly, particularly among classic car enthusiasts, where prices are generally higher than at wireless swapmeets. Conversely other radio equipment can be found at giveaway prices at autojumbles (which are listed in the classic car monthlies).

Car radio specialists

ANTIQUE AUTOMOBILE RADIO, 700 Tampa Road, Palm Harbor, FL 34683, USA (00 1 800-933 4926). Free catalogue of repair parts.

CLASSIC CAR RADIO, 6 Sherrard Road, Market Harborough, LE16 7LD (01858-446052). Car radios and eight-track audio units. Mail order plus stall at motor festivals and autojumbles.

A.C. JAMES, 10 Westview, Paulton, Bristol, BS18 5XJ (01761-413933). Car radio repair/restoration service, ancient or modern, polarity changing, etc. etc.

TORQUAY AUTOPARTS, 43 Ellacombe Road, Torquay, TQ1 3AT (01803-200436). Supply period car radio sets from 1950s and 60s.

VINTAGE RADIO SERVICES (Lester Moon) 37 Court Road, Frampton Cotterell, Bristol. BS17 2DE (01454-772814). Repairs, restoration and supply of all radios from late 1920s onward. Car radio specialists, particularly Radiomobile. FM conversions. No connection with Vintage Wireless Company of Bristol or Manchester.

VINTAGE WIRELESS COMPANY (Manchester) Ltd, Britannia Garage, 8 Britannia Road, Sale, M33 2AA (0161-973 0438). Domestic radios from 1930s to 1960s plus period car radio sales and restoration. No connection with former Vintage Wireless Company of Bristol.

South West members stage Mid Devon exhibition in June

By Barrie Phillips

For the second year a small group of BVWS in the South West were invited to stage a Vintage Wireless Exhibition at Thorverton Vintage Rally and Country Fayre. Having last year shown almost 60 domestic table and portable sets from the 20's to the 60's, we felt an exhibition of perhaps fewer sets, but based on themed ranges covering the wider world of communications, would have increased appeal. With three avid collectors participating our biggest problem was what to leave out.

An HMV auto-stop table gramophone, ably DJ'd for the weekend by Mr Gordon Farrance, created a nostalgic atmosphere and welcomed visitors to the exhibition. (Many were amazed at the volume - despite using soft-tone needles)

Several ex-servicemen took a walk down memory lane looking at our British Army No 18 and No 22 transmitter-receivers. Hams were catered for with tidy examples of a National HRO and an Hammarlund HQI2OX while a Frequency Shift Keying Converter and a Creed Teleprinter catered for those with a preference for land line communications.

A Pye MM and a superb example of a Burndept Universal Screened Five of 1930 provided the introduction to domestic radios. To tie in with the Summer BVWS Bulletin and our promotion of BVWS Membership, we included a display of Odeon style sets all specially polished for the occasion. Despite this tender loving care a DAC1O provided some pyrotechnics on the Saturday afternoon - and I have another repair job to do. A representative range of some 18 Portables were displayed on a table at the rear, with some on a turntable to add movement and interest.

Cards giving a brief description/special features accompanied each set, while Mike Butt, Gordon Farrance and Barrie Phillips were on hand, on a rota, to answer queries and talk about the past. A set of Norman Jackson's posters provided a backdrop to the display and a useful reference for people trying to remember family sets from their childhood.

It was a most enjoyable weekend - highly recommended to other members considering something similar. Several people with small collections are now aware of the BVWS, some useful contacts were established (one conversation with a lady from a re-cycling centre has already avoided a Leak TL/12 with 2 x KT66's going to the skip) and Mr Gordon Farrance may need to come out of retirement!

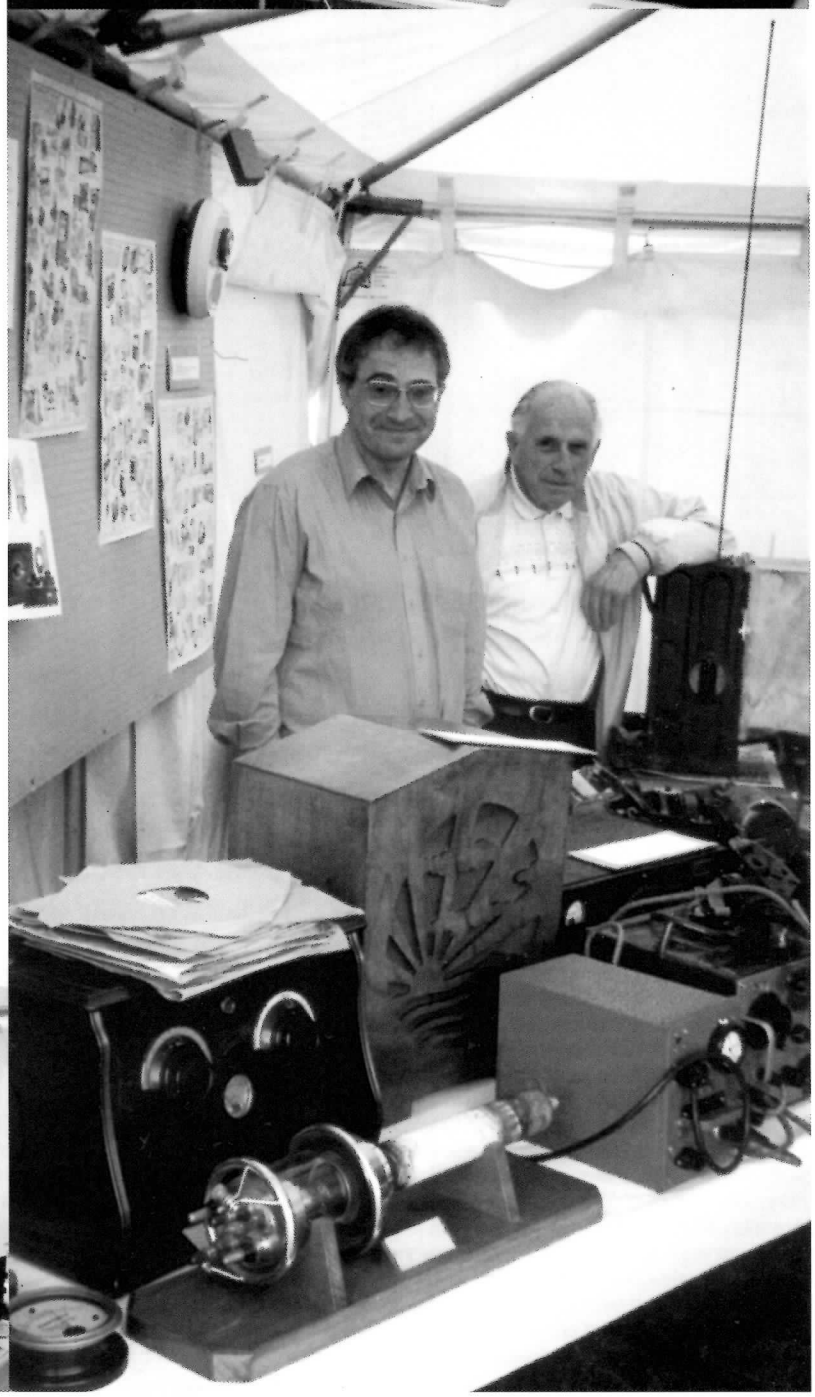

Restoration for beginners

by Chan Sundaram

I started to become interested in collecting Radios some five years ago. This was started by my finding an old 1950's GEC Radio that I managed to renovate from non-working status to a working set. From then onwards my appetite was whetted and I started to look for more and more old Radio sets. I always picked old 50's sets, which were not only cheap, but also easy to work on. At this stage I only knew the basics and would try to tune the oscillating coil in an attempt to get them working. This obviously was the wrong thing to do, although somehow I always managed to do it until my knowledge improved.

I then started to look around for someone to help and maybe teach me more. I met and made a friend: 'Ken', accidentally at a car boot sale who offered to teach me about wireless repair. My first lesson was on how to read resistance and ohms; can you believe how difficult this is when you have no experience of reading a meter or measuring voltage in your life before. After two lessons we came to an agreement that he would work with me on a set and also on how to follow a circuit diagram. This helped me a great deal and by trial and error I began working on my sets using the information that I had learned from my new friend. However I found myself looking for more help and whilst out one day I visited Rupert's radio shop who suggested I contact Gerry Wells from the Vintage Wireless Museum for a Sunday workshop. I had just found a 1928 KB Suitcase battery set which was badly disintegrated inside. I made an appointment to see Gerry and looked forward to meeting him. I must say this was one of the best things that has ever happened to me. Gerry and I worked all day and managed to restore the set to working order.

There is not a lot I can say about Gerry as his reputation with Radio speaks for itself. Personally I admire him tremendously and I hold a high regard for his knowledge, experience and abilities with Radios that precede his reputation. Since my initial contact with Gerry I have visited him many times and he has always been willing to help and guide me. Besides Ken and Gerry I made another friend, 'Keith'. His father owned a Radio shop in Eastbourne that was known as 'Messrs F&W Ellis Ltd.' of Cavendish place; his name was listed in The Wireless Retailers Association, 1931.
Keith started as a young boy restoring and rebuilding old broken Radio sets he found on the tip. Once he had achieved what he wanted he moved onto another.
I spent a lot of time with Keith and he was willing to help me further and I feel very grateful to him. He is a well-known member of the Amateur Radio Society and is always involved with one project or another. Keith built the transmitter in Bucksbrough.

I have now moved on and am concentrating my collection towards old 30's and 20's sets although I do hang onto my restored 50's sets also. During this time I have made many good friends; people like myself and have made some useful contacts.

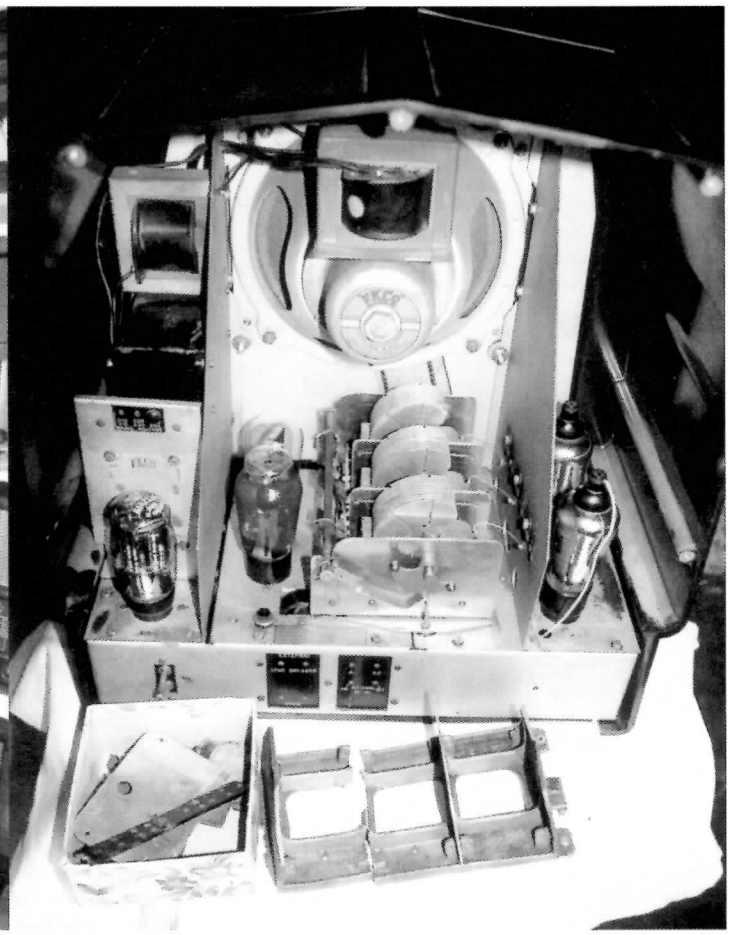

One point I would like to make is, recently I attended a meeting in March 1999 and managed to buy an Ekco RS3. I was very excited and pleased with my purchase. However when I reached home and removed the back of the set I discovered that the Gang Capacitor was in pieces. I was so annoyed and disappointed that the damage had not been admitted during the sale. After much deliberation I decided to approach Gerry. After looking at the set Gerry decided that it could be repaired. I helped by getting some Brass Sheeting ready and then left the set with Gerry for him to get the 3 Gang Capacitors, and to do the work that I had every faith he would do. You can imagine how pleased I was to see the set come alive and working again and I am eternally grateful for Gerry's help.

I have enclosed pictures of part of my radio collection. The R.S.3 which I bought with the broken 3 Gang capacitor and the completed version including the restoration of the inside.

I would like to say that when a collector or dealer places items up for Auction, it would save a lot of disappointment if major faults were disclosed in an honest way to a prospective purchaser. I would like to finish by thanking the members of the BVWS for helping me and for taking the time to read what I have to say. If I can be of any help to anyone I would be more than pleased for them to contact me.

'Some Characters I Have Met' continued

of a Jekyll and Hyde character, but matters finally came to a head after one mid-day carousal, when faced with an irate customer, he more or less threw him downstairs.

Sam had to go of course and after leaving our employ went steadily downhill and in fact became a hopeless alcoholic. I have met many ex-Merchant Navy personnel who have spent the greater part of their working lives abroad and they all seem to have this predilection for alcohol... must be due to the enforced loneliness or the hot climates perhaps.

My most abiding memory of Sam is when he would call across the workshop with cigarette lighter in hand and say "Get this one Bill" where upon he would break wind violently and ignite the escaping gases. ("I almost said 'Farted' for 'break wind' but I corrected myself just in time!") The gases really did burn by the way... there was no explosion you understand but they burned for a second or so with a pale blue flame... "Exciting isn't it?"

Meanwhile Sam would be standing there, his plump face wreathed in smiles saying" Bye gum... that were a reet good 'un that were!"

Triode Valves in Radio Receivers or 'Valves, and the Juice to give Them' 1922 to 1930 part 3

by Ian MacWhirter.

7. Overloading by Present Day Transmissions

Prior to the introduction of the high power Regional Transmitters in the early 1930s, most of the BBC stations used low powers of around 1.5kW input. The London transmitter 2LO, installed at the top of Selfridges building, ran at 3kW input in 1928 and put a field strength of some 1mV/metre in an area bounded by Saffron Walden, Bedford, Reading, Aldershot, Horsham and Maidstone. (Refs. 99 & 100).

The 100kW transmitters of today with increased aerial height could increase the carrier signal one hundred fold. Moreover, the depth of modulation is today deeper so that the rectified signal is also likely to be larger for a given carrier field strength. It is very easy to obtain a false idea of how well the pre-1930 receivers behaved if excessively large signals are applied to the aerial terminal.

A simple circuit shown in Figure 13 will at the same time simulate the capacity loading of the old "PMG standard aerial", yet attenuate the signal to something approximating to period levels. This does not, however, simulate the behaviour of an aerial as a somewhat damped tuned circuit. For the reader who wishes to construct a true artificial aerial, Ref. 103 provides one example.

8. Last Comments on Filament and Anode Voltage Control

Any use at all of old valves will hasten their demise, but even no use is not an answer - one day the glass will de-vitrify. So set collectors should use their old valves but with appropriate care.

The amassed evidence of the dangers of applying too high a filament voltage may leave today's reader enquiring if his amateur predecessor ever knew what the applied voltage was. Probably few did. The author has found it almost irresistible to "inch up" filament brightness of bright emitters as astonishing incremental improvements are heard in performance, only to find upon measurement that the rated V_f was being exceeded. His predecessors did it too, one reference saying "it is also necessary to see that the filament is not run at too low a temperature, but this is a fault of which valve users are rarely guilty" - author's italics, (Ref. 104). Even the arbitrarily learned visual skill of assessing the "right temperature" for an early bright valve was of little use after the arrival of heavily gettered bright and dull emitter valves which obscured a view of the filament. Although Edison-Swan maintained a window in the getter for some years, the increasing use of valves mounted upon a baseboard within a cabinet but without a viewing window — the so-called American cabinet of 1925 onwards — prevented even a subjective opportunity to assess applied voltage.

References urging a scientific monitoring by use of voltmeter and rheostat scale pointer are difficult to find; one was published in 1924 (Ref. 105) and two were published in 1925. (Refs. 101, 106). Sadly, this may have created new problems; of period voltmeters measured by the author, one took 160mA at 4Volts applied, another took 560mA. If such instruments were removed following an adjustment as in the 1924 reference, the p.d. actually applied across the filament pins would have risen above permissible tolerances.

Pre-1930 valves are comparatively scarce and there is some possibility the original vacuum may have softened slightly, with risk of ionic bombardment of the filament. Users are urged to use such a scientific approach to the use of minimum values for V_f and V_a as is appropriate to the valve class and consistent with reasonable performance. There are risks to valve life arising from softening caused by leaks or release of occluded gas; one 1924 authoritative reference to the inverse relation between V_a and life of the then dull emitter valves should be heeded today. In this, GEC were quite clear, "In general, and with other factors constant, the life of thorium emission was found to decrease with increasing anode voltage...". Also, "In general, the life of the emission is longer the lower the temperature of the filament". (Ref. 101).

The recommendations below for specific classes include running the filament up to the makers' recommended maximum voltage; do not run at makers' rated current, especially bright valves. There may be some difficulty in determining what the recommended maximum is; for example many of the "2 Volt" class of oxide coated valves started off with V_f max = 1.8V. Section 4.5 gives further details.

For all valve types, especially in H.F. and power stages, use as low an H.T. and highest grid bias in LF stages as is consistent with adequate performance. This will maintain the space charge and minimise any ionic bombardment of the filament, but it must be understood this would not be the right approach if valve samples were today in bountiful supply and/or were perfect specimens.

Meanwhile, the best filament control to ensure extended life for today's remaining specimens can be summarised as:

8.1 Tungsten filaments.

Switch on and off with a gradual current change using a rheostat. Use as low an operating temperature as possible. Never exceed makers' rated voltage; check this by measurement: a 5 ohm rheostat feeding a type R from a 6 Volt accumulator, the early recommendation and frequently the only way of ensuring that 4 Volts exactly can be

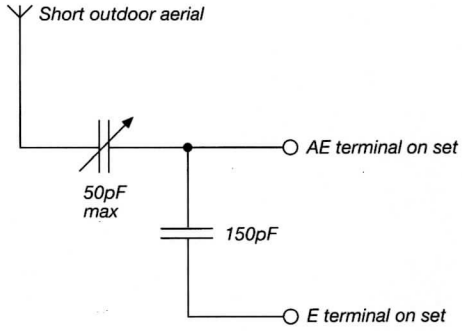

Fig 13: Simple signal attenuator

delivered at the valve pins, will be capable of overrunning the valve if the connecting leads are short and the terminals are in good order. Adjust them and then dim them!

8.2 Thoriated tungsten filaments.

One must balance the conflict of low voltages to give a long life to the filament substrate against the need to run at makers' rated voltage to ensure thorium diffusion through the substrate. Too low a voltage will result in eventual depletion of surface thorium. With luck, there will be sufficient stored thorium in the filament substrate to allow rejuvenation by running at rated filament voltage for some time without voltages to the other electrodes. In the event that the vacuum has softened, then unnecessarily high values of V_a will result in destructive ionic bombardment of the filament's surface of thorium and ultimately of the filament substrate.

8.3 Oxide coated filaments.

Unlike diffusion based filaments, the coating can never be rejuvenated. Low filament voltages coupled with low anode voltages to avoid saturating the protective space charge, provide an excessively cautious way to ensure a long life, so run the filament at makers' full rated voltage. The normal temperature of the oxide coated filament is sufficiently low that little advantage to the life of the substrate is gained with reduced temperature.

References:

99 Wireless World, 3 October, 1928, Contour Map. P.459.
100 Wireless, 24 July, 1926, "Radio Contours Summarised". P.314.
101. Popular Wireless, 3 October, 1925, "Two Technical Hints for Amateurs". P.310.
102. Wireless World, 23 April, 1924, "Thermionic Valves with Dull Emitting Filaments". P.107.
103 Wireless Telephony and Broadcasting, H.M. Dowsett, Gresham Publishing, 1924, Vol. II. Pps 193/4.
104. Wireless World, 1 April, 1925. "Good Quality in L.S. Reproduction". P. 248.
105 Wireless World, 26 November, 1924.

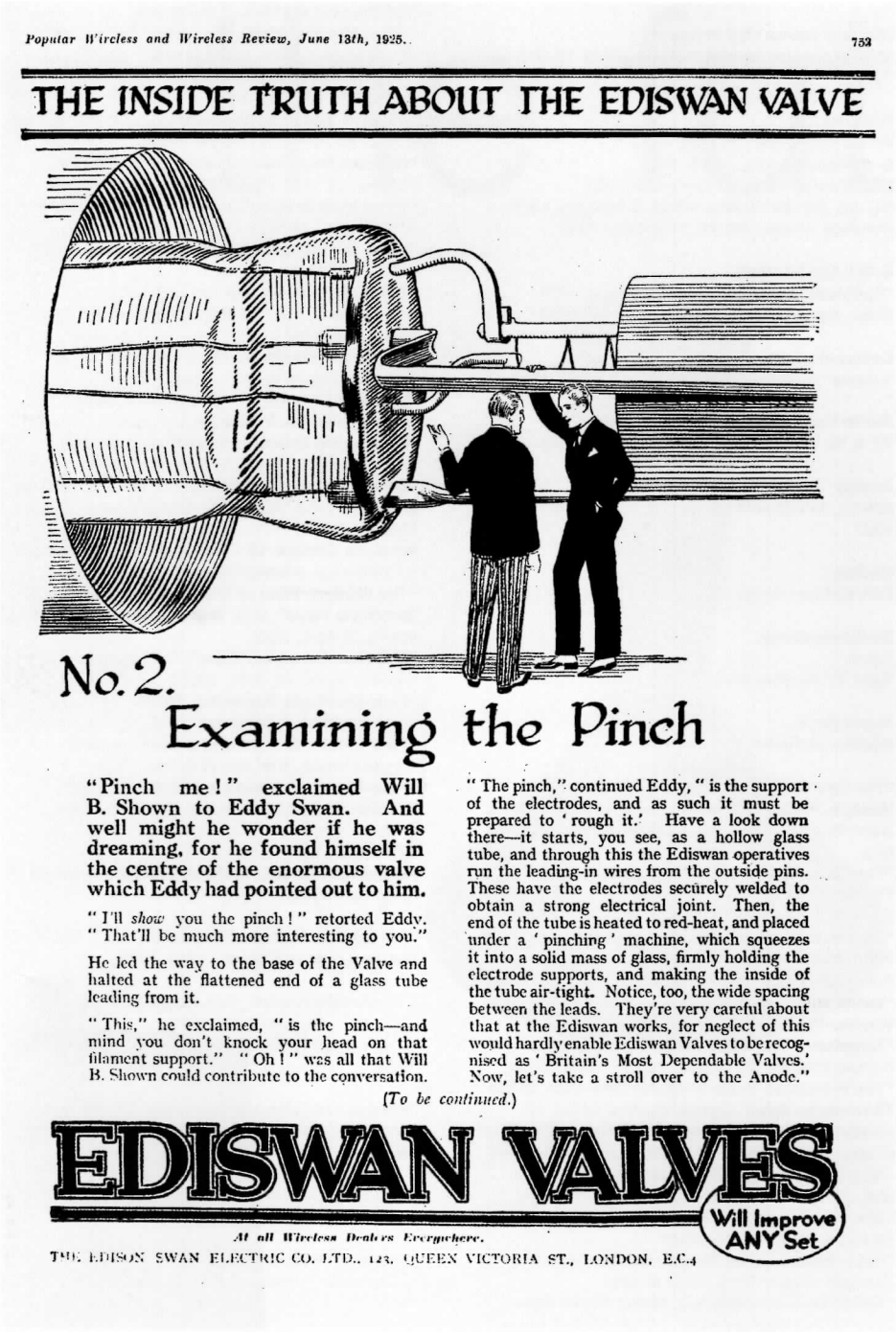

Popular Wireless and Wireless Review, June 13th, 1925. 753

THE INSIDE TRUTH ABOUT THE EDISWAN VALVE

No. 2.

Examining the Pinch

"Pinch me!" exclaimed Will B. Shown to Eddy Swan. And well might he wonder if he was dreaming, for he found himself in the centre of the enormous valve which Eddy had pointed out to him.

"I'll *show* you the pinch!" retorted Eddy. "That'll be much more interesting to you."

He led the way to the base of the Valve and halted at the flattened end of a glass tube leading from it.

"This," he exclaimed, "is the pinch—and mind you don't knock your head on that filament support." "Oh!" was all that Will B. Shown could contribute to the conversation.

"The pinch," continued Eddy, "is the support of the electrodes, and as such it must be prepared to 'rough it.' Have a look down there—it starts, you see, as a hollow glass tube, and through this the Ediswan operatives run the leading-in wires from the outside pins. These have the electrodes securely welded to obtain a strong electrical joint. Then, the end of the tube is heated to red-heat, and placed under a 'pinching' machine, which squeezes it into a solid mass of glass, firmly holding the electrode supports, and making the inside of the tube air-tight. Notice, too, the wide spacing between the leads. They're very careful about that at the Ediswan works, for neglect of this would hardly enable Ediswan Valves to be recognised as 'Britain's Most Dependable Valves.' Now, let's take a stroll over to the Anode."

(*To be continued.*)

EDISWAN VALVES

Will Improve ANY Set

At all Wireless Dealers Everywhere.

THE EDISON SWAN ELECTRIC CO. LTD., 123, QUEEN VICTORIA ST., LONDON, E.C.4

"Checking Filament Voltage". P. 279.

106. Wireless World, 30 September 1925. "Care of Low-Consumption Dull Emitters". P. 444.

9. Acknowledgements

The author gratefully acknowledges the help from many people including the late Mr. E.Y. Robinson, Chief Valve Engineer of the former Metropolitan Vickers Electrical Co. Ltd. whose recollections over details of filament design in the mid 1920s have been a revelation. The late Mr. J.H. Ludlow also from the former 'Metro-Vicks', provided much insight into vacuum physics. The late Mr. W. Taylor, Chief Applications Engineer of the former Edison-Swan Electric Co. Ltd., for reading the manuscript and making countless valuable observations and corrections. Mr. B. Eastwood, former Assistant Chief Applications Engineer and Mr. S. Cole, former Chief Valve Development Engineer of Edison-Swan and its successors at Brimsdown bore the brunt of many questions beginning "can you remember why...". The late Mr. E.B. Munt, also from the former Edison-Swan Electric Co. Ltd., has read the manuscript and made many detailed points.To Carl Glover for helping me get this article published from a typescript made some 18 years ago and also for drawing the diagrams based on my original scematics. To Mr. G. Wells of the Vintage Wireless Museum go the author's thanks for helpful conversations about valves and their manufacture yesterday and the possibilities for tomorrow, over innumerable cups of "Rosendale" tea. To the current proprietors of "Wireless World" go my thanks for permission to quote freely from their publication in earlier times. To the late Pat Leggatt go especial thanks for reading the final proofs and for making many detailed and global criticisms, all of which I have tried to meet. His help has, I feel, breathed a degree of life into the text. Finally, the author must acknowlege the forbearance of his wife during the time it took to research, write, type, correct, edit and print this text.

Appendix I
Valve Reviews

Below is given a non-exhaustive set of references to commonly found valve types which were published in the period 1921 to 1930.

Marconi-Osram Valve Co. Ltd.

R Wireless World, 7 May, 1924, Wireless World, 18 June, 1924
R4B Wireless World, 26 August, 1924. (Advertisement)
R5V Wireless World, 7 May, 1924
DE2 HF & LF Wireless World, 27 January, 1926
DE3 Modern Wireless, January 1924, Experimental Wireless, May 1924. Wireless World, 25 June, 1924
DE3b Wireless World, 15 April, 1925
DE4 Experimental Wireless, November 1924
DE5 Wireless World, 30 July, 1924
DE5a Wireless World, 5 August, 1925
DE5b Experimental Wireless, November, 1924, Wireless World, 24 September, 1924
DE6 Wireless World, 27 August, 1924, Experimental Wireless, November 1924
DE7 Wireless World, 26 November, 1924
DE8 HF Wireless World, 6 January, 1926
DE8 HF Wireless World, 6 January, 1926
DEQ Wireless World, 30 April, 1924
DEV Experimental Wireless, November 1923, Wireless World, 30 April, 1924
DER Experimental Wireless, November 1924, Wireless World, 27 August, 1924, Wireless World, 18 February, 1925
DEHL Wireless World, 13 June, 1928
DEL610 Wireless World, 2 January, 1929
HL610 Wireless World, 2 January, 1929
LS5 Experimental Wireless, November 1923
DEH210 Popular Wireless, 4 June, 1927
DEH612 Wireless World, 2February, 1927. P. 148.
DEL210 Popular Wireless, 4 June, 1927
DEP215 Popular Wireless, 4 June, 1927
V24 Wireless World, 26 August, 1924. (Advertisement)
Q, QX Wireless World, 26 August, 1924. (Advertisement)
LT1, LT3 Wireless World, 26 August, 1924. (Advertisement)

A.C. Cossor Ltd.

P1 Wireless World, 22 October, 1924, Wireless World, 28 October, 1925
P2 Wireless World, 22 October, 1924, Wireless World, 28 October, 1925
RMR Wireless World, (advertisement), October, 1921, p. xviii.
W1 Wireless World, 28 October, 1925
W2 Wireless World, 28 October, 1925
W3 Wireless World, 28 October, 1925
WR1 Wireless World, 28 October, 1925
WR2 Wireless World, 28 October, 1925
Point One (group) Wireless World, 11 August, 1926
Point One R.C. Wireless World, 2 February, 1927. P. 147. Popular Wireless, 5 March, 1927
Point One H.F. Popular Wireless, 5 March, 1927
Stentor 4 Wireless world, 2 February, 1927. P. 147.
Stentor 6 Popular Wireless, 5 March, 1927
210HF Wireless World, 30 October, 1929
210LF Wireless World, 30 October, 1929
210RC Wireless World, 30 October, 1929
220P Wireless World, 30 October, 1929, Popular Wireless, 14 September, 1929

Metropolitan-Vickers Electrical Co. Ltd. (Cosmos)

DE11 Wireless World, 11 March, 1925, Modern Wireless, August 1925
SP18/R Wireless World, 11 March, 1925, Wireless World, 9 January, 1926
SP16/R Wireless World, 17 October, 1928, Wireless World, 8 August, 1928
SP16/G Wireless World, 8 August, 1928, Wireless World, 17 October, 1928
SP18/RR Wireless World, 8 August, 1928
SP55 Red Spot Wireless World, 8 December, 1926
SP55 Blue Spot Wireless World, 8 December, 1926

British Thomson-Houston Co. Ltd.

R Wireless World, 11 June, 1924
B3 Wireless World, 3 June, 1925
B4 Wireless World, 14 November 1923, Experimental Wireless, 21 May, 1924, Wireless World, 21 May, 1924, Wireless World, 18 February, 1925
B5 Wireless World, 14 November 1923, Modern Wireless, January 1924, Experimental Wireless, May

continued on next page

1924, Wireless World, 25 June, 1924
B6 Wireless World, 10 December, 1924
B7 Wireless World, 3 June, 1925
210L Wireless World, 14 December, 1927
215P Wireless World, 14 December, 1927

The Edison-Swan Electric Co. Ltd.
R Wireless World, 11 June, 1924
AR.06 Modern Wireless, January 1924, Experimental Wireless, May 1924, Wireless World, 25 June, 1924, Wireless World, 18 February, 1925
A.R. 0.06 H.F. Wireless World, 5 August 1925
A.R. 0.06 L.F. Wireless World, 5 August 1925
ARDE (HF) Wireless World, 22 April, 1925
ARDE (LF) Wireless World, 22 April, 1925
PV2 Wireless World, 18 April, 1928
PV5DE Wireless World, 25 February, 1925
PV6DE Wireless World, 15 April, 1925, Wireless World, 4 December, 1925
RC2 Wireless World, 2 February, 1927. P. 148.

Mullard Radio Valve Co. Ltd.
ORA Wireless World, 18 June, 1924, Experimental Wireless, November 1924
HF Wireless World, 17 September, 1924, Experimental Wireless, October 1924
LF Wireless World, 17 September, 1924, Experimental Wireless, October 1924
DF ORA Experimental Wireless, May 1924, Wireless World, 25 June, 1924
D.06 H.F. & L.F. Wireless World, 7 January, 1925, Experimental Wireless, February 1925
D.3HF & LF Wireless World, 14 January, 1925, Experimental Wireless, February 1925
D.3LF Wireless World, 14 January, 1925, Experimental Wireless, February 1925
WECO Wireless World, 14 November 1923, Wireless World, 14 May, 1924, Wireless World, 18 February, 1925, Experimental Wireless, February 1925
LFB1 Experimental Wireless, November 1923
DFA3 Experimental Wireless, February 1925, Wireless World, 23 September, 1925
DFA4 Wireless World, 26 August, 1925
PM2 Wireless World, 11 August, 1926.
PM3 Wireless World, 21 April, 1926.
PM4 Wireless World, 4 November, 1925
PM4D Wireless World, 25 July, 1928
PM5B Wireless World, 2 February, 1927. P. 149.

E.B. Myers Co. Ltd.
Myers Wireless World, 6 February, 1924

Thorpe
Thorpe Wireless World, 12 March, 1924

Economic Electric Ltd.
"0.06" Wireless World, 1 April, 1925.

American
UV199 Wireless World, 27 May, 1925, **UV201A** Wireless World, 27 May, 1925, **UX112** Wireless World, 23 September, 1925 **UX210** Wireless World, 23 September, 1925
WD11 Wireless World, 27 May, 1925

La Radiotechnique (French)
Radio Micro Wireless World, 27 May, 1925

Electron Co. Ltd 'Six-Sixty'
"Six-Sixty" Wireless World, 3 September, 1924.
SS2a HF Wireless World, 8 December, 1926
SS9 Wireless World, 8 December, 1926
SS10 Wireless World, 8 December, 1926
SS11 Wireless World, 8 December, 1926

Neutron
H.406 Wireless World, 21 April, 1926
L.406 Wireless World, 21 April, 1926

Fellows Magneto Co.
F.E.R. 1. & F.E.R. 2.. Wireless World, 24 June, 1925
F1 & F2 Wireless World, 8 April, 1925

Burndept Wireless Ltd
HL 565 Wireless World, 30 September, 1925
HL 512 Wireless World, 30 September, 1925
H512 Wireless World, 30 September, 1925
L525 Wireless World, 30 September, 1925
HL213 Wireless World, 30 September, 1925
H310 Wireless World, 30 September, 1925
HL310 Wireless World, 30 September, 1925
L240 Wireless World, 30 September, 1925

Midland Valves Ltd. (repairs)
Miscellaneous repairs Wireless World, 15 October, 1924

Radions Ltd
A2 Wireless World, 23 April, 1924
D Wireless World, 23 April, 1924
GP Wireless World, 24 December, 1924
DE .06, DE .34 Wireless World, 3 February, 1926
Pyramid Wireless World, 3 February, 1926

G.W.I. Ltd (repairs)
"Plateless" Wireless World, 20 August, 1924.
Misc. repairs Wireless World, 17 June, 1924

Loewe-Audion
'Loewe' Wireless World, 16 December, 1924

Radio Ecco
TZ & TE Wireless World, 11 November, 1925

Aneloy
AP412, AP425 (4Electrode) Wireless World, 4 May, 1927

Sodion
D21 Wireless World, 29 July, 1925. Pps 129/130.

Ex-Government
Figure 7
Type 'C' Wireless World, 10 September, 1924

Appendix II
Additional Reading Material (articles)

"The Current Adjustment of High Tension Voltage, Filament Current and Grid Potential". J. Scott-Taggart, Modern Wireless, April 1924, P.594 et seq.
"The Development of the Oxide-coated Filament". Hodgson, Hartley and Pratt, The Wireless Engineer, March 1929. P.141 et seq.
"Thermionic Valves with Dull Emitting Filaments". GEC Research Staff, Wireless World, 23 April, 1924. P.107 et seq.
"Valves with Dull-Emitting Filaments". Thompson. Wireless World, 5 May, 1924. Pps 137/8.
"Tungsten - The Valve Metal". J.F. Corrigan, Popular Wireless, 22 August, 1925. P.1067 et seq.
"The Principles Underlying the Operation of the Thermionic Valve". Barrell, Wireless World, 16 January, 1924. P491 et seq., 23 January, 1924, P.528 et seq., 30 January, 1924, P.565 et seq., 6 February, 1924, P.592 et seq., 13 February, 1924, P.617 et seq., 27 February, 1924, P.676 et seq., 5 March, 1924, P.710 et seq., 19 March, 1924, P.765 et seq., 26 March, 1924, P.797 et seq.
"What Valve Curves Mean". Hallows, Modern Wireless, August 1924. P.263 et seq.
"The Evolution of the A.C. Mains Radio Valve". J.H. Ludlow, Wireless World, March 1973. P.144 et seq.
"Milestones in Receiver Evolution". W.T. Cocking, Wireless World, April, 1971. P.160 et seq.
"America Changes its Valve Bases". P.W. Harris, Wireless, 3 July, 1926. P.215 et seq.
"Valve Manufacture: Some German Methods". A.†Neuburger, Experimental Wireless, February 1924. P.271 et seq.
"On the Influence of Input Connections Upon the Operation of Triodes". W.D. Owen, Experimental Wireless, July 1924. P.598 et seq.
"Two-Volters of Today". K.D. Rogers, Popular Wireless, 8 October, 1930. P.297 et seq.
"An Obsolescent Component" (Filament Rheostat), Wireless, 28 August, 1926. P.66 et seq.
"Automatic Grid Bias". S. O'Connor, Popular Wireless, 5 December, 1925. P.801.
"Why Use Filament Rheostats". J.H. Reyner, Wireless, 8 May, 1926. P.314 et seq.
"Can We Standardise Our Valves". J.H. Reyner, Wireless, 4 September, 1926. P.92 et seq.
Figure 8
"New Valves for Old Receiver". F.E. Henderson, Wireless World, 30 November, 1934. Pps. 432-433.
"The Thermionic Valve". J.A. Fleming, Wireless World, 30 September, 1925. P.417 et seq.
"The Valve at its Best". W.I.G. Page, Wireless World, 25th February, 1931, Pps.208-209, 29th April, 1931, P.452 et seq.
"Valves in the Making". W. James, Wireless World, 30th September, 1925, P.435 et seq.
"Valve Manufacture". W.J. Jones, Experimental Wireless, June 1924. P.508 et seq.
"How to Make Valves". Garratt, Wireless World, 8 April, 1925. P.293 et seq.
"Modern Valve Manufacture". J.J. Gracie, Wireless World, 6th April, 1927, P.406 et seq.
"German Valve Manufacture", Wireless World, February 3, 1926. P166-168.
"Valve Manufacture". Wireless World, 19th and 26th. August, 1922.
"Valve Selecting Charts", Wireless World, July 17, 1929. P. 48 et seq.
"The Thermionic Valve - its origin and development". J.A. Fleming. Wireless World, 30 September, 1925
"The Three Electrode Valve Detector". R.D. Bangay. Wireless World, 13 May, 1925.
"Wireless Circuits 16 - Grid Rectification". S.O. Pearson. Wireless World, 14 July, 1926.
"Comparing Detector Valves". W.T. Cocking. Wireless world, 22April, 1931. P. 427 et seq.
"On the Detecting Efficiency of the Thermionic Detector". H.J. Van der Bijl, Proc.IRE., Vol. 7, No. 6, May 1919.
Wireless Circuits 15 - The Valve as a Detector". S.O. Pearson. Wireless World, 30 June, 1926.
"The Modern View of Electricity and the Three-Electrode Valve", G.G. Blake. Wireless World, 15 April & 22 April, 1922.
"The New Screened Valve". N.W. McLachlan. Wireless World, 31 June, 1927.
"Four-Electrode Receiving Valves", A.C. Bartlett. Wireless World, 2 December, 1925. P. 773.
"Four Electrode Valves and their Circuits". Wireless World, 20th and 27th July, 1922.
"Four-Electrode Valves and their Circuits", Wireless World, May 13th and May 20th., 1922.

APPENDIX III
Additional Reading Material (Complete works or major sections)

"Text Book on Wireless Telegraphy", Vol. II. Rupert Stanley, Longmans Green, 1914, 1919.

"The Oscillation Valve", R.D. Bangay, Iliffe, c. 1920.

"The Thermionic Valve". J.A. Fleming, Wireless Press, 1924.

"Wireless Principles and Practice". L.S. Palmer, Longmans Green, 1927 also "Wireless Engineering", 1936.

"Wireless". L.B. Turner, Cambridge University Press, 1931.

"Radiotron Designers Handbook". F. Langford-Smith, Amalgamated Wireless Valve Co. (Sydney, Australia), 1953.

"70 Years of Radio Tubes and Valves". John W. Stokes, Vestal Press (N.Y., USA), 1982. Note: deals with the history of device types, not device characteristics.

"Saga of the Vacuum Tube". G.F.J. Tyne, Howard Sams & Co. (USA), 1977. Note: this too deals with valve type history.

"The Thermionic Vacuum Tube and its Applications". H.J. Van der Bijl, McGraw-Hill (USA), 1920.

"Principles of Radio Communication". J.H. Morecroft, John Wiley and Sons (USA). 1921.

"Theory of Thermionic Vacuum Tubes". E.L. Chaffee, McGraw-Hill Book Company (USA), 1933.

The BVWS Old Comrades Association

Membership, so far, TWO. Report by Dave Adams

Ken Adams 1944

Dave Adams 1944

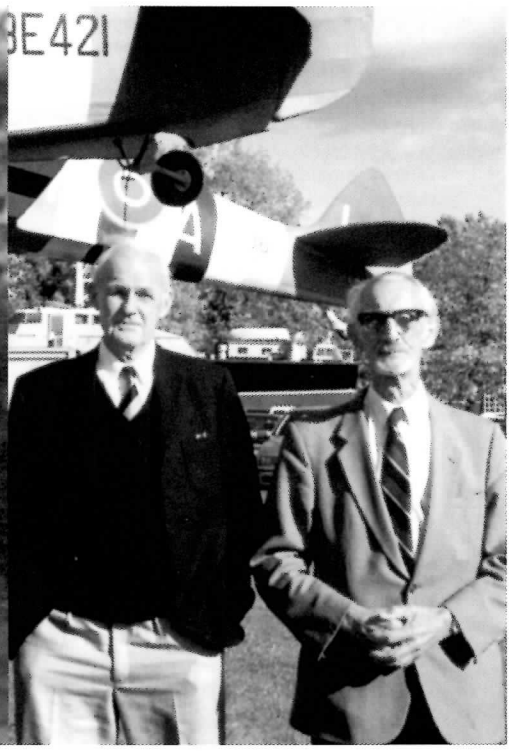

Ken and Dave Adams now

Ken Adams (no relation) and I were serving together in the RAF in 1944.

We met again recently via the good offices of Gerry Wells and the reunion took place at Harpenden. Our immediate comment was on the lapse of time - fifty-four years - since we were last together. Then we began to exchange memories. These, first of all, were not anything to do with the work we may have been doing then. I remembered a tall good-looking fellow who was very good at sport - and technical drawing! He remembered my playing a ukelele and singing a song of the time, "Paper Doll". Does it make you wonder how we won the war?

We met in that year at Chigwell, Essex where mobile signals units were being formed ready to go into France. We were allotted to a "C" unit, a medium sized one, I think, having about thirty personnel and ten vehicles. We were to be completely self-supporting and able to move at short notice and be operational in very short time. One wagon had two T1154's. These had brightly coloured tuning knobs and had "click-stops" that could be pre-set to provide a quick frequency change with only a touch on the aerial trimmer being required. We had a telescopic aerial fixed on the vehicle. Other rigs were experimented with. I remember an "inverted V". Another vehicle housed receivers. These I remember as being powered by rotary converters that very soon began to give trouble. We were puzzled. We turned to the manual - a rare occurrence. This said that the unit was intended for something like two hours duration only! We instituted a routine of daily servicing and kept them going. How long this held I do not know.

(This recollection also brings to mind that we kept all the manuals in a smart box that bore a stylishly painted title (Ken' s work I am guessing). What was the title? It was "Bumph" - a word that had its birth in wartime, I think.)

We were moved several times - for practice I suppose - I remember Heston, Tangmere and a location near Bucklers Hard, opposite the Isle of Wight. While we were there we heard the news that the invasion of Normandy had begun and thus we knew we were not to be in the first wave. Shortly after this Ken and I were, separately, posted elsewhere. (Postings in the RAF always left one wondering. The instruction from Records could be by name or it could be just specifying rank and trade, so that, one never knew whether it was a local choice or not!) Ken went to a "P" unit, a smaller more mobile unit that operated near the front. I was sent to the HQ unit - right at the rear.

Here is Ken' s story.

If it hadn't been for Gerry Wells and the Museum I might not have met up with 'Dave' again - so it happens I have had a most interesting 1998. You see, my visits to Dulwich finally led me to associate Dave Adams, the archivist, with the Corporal David Adams last seen fifty-four years ago.

As it happened, he and I were fellow wireless erks in '44. In his case he had the stripes to vouch for his longer service and, it must be said, greater expertise which stretched beyond the air waves to the vocal chords - a ukelele and 'Paper Doll'. Mind you, that was the least bawdy song; don't I recall 'Molly McGuire' somewhere?

Readers will readily understand that technical training and transition even to passable standards took much time and effort - a minimum of one year. The mounting of the invasion of Europe immediately threw up worrying gaps in communications - the sheer speed of advance once Falaise was behind us. There was a great need for a good, secure signals network. The civilian systems, the usual landlines, were overwhelmed and were sabotaged by the Germans. Over and above that, RADAR was at the top of the shopping list. Our 'P' M.S.U. (there were seven of us) linked to No3 M.R.C.P. (mobile radar). We provided two channels of VHF RT, ground to air. This entailed being as close to events as possible (without being in too much danger, of course) and being ready to move at any time. We had an amalgam of US and British equipment - G.M.C. trucks - Bedford and Crossley lorries, a Ford 3-tonner housing two Nunn petrol-electric sets which ran twenty-four hours a day providing all our power.

As radar/wireless mechanics we were overtaken by a significant change. "Turn in the soldering iron and AVO". You see, the introduction of US unit circuits led to fault finding by elimination. Replace with new: away with the old! - I could go on for hours but Dave would put me on a charge. (Protest from Dave, "I never put anyone on charge. I got done myself once though.")

In retirement from - well, that's another story - I have been connected with the RAF Museum at Hendon where I help when I can in the Fine Arts Department. (Please come and see us. The Museum is worth the effort.)

It has always been a regret that the role of RAF signals in the European arena hasn't been chronicled - so many of we ' Sparks' working on MSU' s, the Wings and aircraft. There is a great story out there. We were useful in peacetime too - GCA sprang from those small beginnings, a bonus for all

continued on next page

aviation since the 50's.

I am now a rookie full member of the BVWS making up for lost time but excitedly reviewing my small collection of "interesting little sets" - as Gerry would say. But it's so nice to have an old friend like Dave back in the fold. - I owed him then and I owe him now.

Should any of 2nd TAF RAF types in signals read and recognise please get in touch with Dave or me.

A last word from me, 'Dave' - We do have a regret. We both discovered Gerry Wells and his Museum about the same time - over ten years ago but we never encountered one another. My visits have been many over this period as I am lucky in living near. Ken's were fewer. Had we met then, when we were ten years younger and more mobile, we could have got together more easily. Our meetings now take a lot of planning. But, needless to say, the occasions are, in our antiquity, even more greatly to be enjoyed.

P.S. For other "Old Comrades" - try 'Service Pals' on Teletext page 682 on Channel 4.

Another Battery Eliminator

by Gary Tempest

I found two previous designs in BVWS Bulletins. The earliest by Andrew Zimmer (Reference 1) has the disadvantage of using a special home wound transformer. The later design by Graham Dawson (Reference 2) uses a switch mode converter and needs a car battery as an input source. This to me just ain't progress. A battery eliminator eliminates batteries. Also, I did not want the probable radio frequency interference that switchers generate.

The design given here (see Figure 1) uses an open toroidal transformer, which is available from Radio Spares. This type of transformer is ideal for this application. It has a very low electromagnetic field and so won't cause hum problems with the associated radio. Another great feature is that it is easy to wind on extra low voltage windings. The only concern needed is to ensure that the volts x amps of the added windings plus those of the original do not exceed the VA rating of the transformer. There is no chance of this with the transformer used as in order to get a 24-0-24 volt secondary a 30 VA device had to be used against a requirement of less than 10 VA. This is calculated from 2V x 1.5 A for heaters and 150V x 30 mA for HT. Grid bias is negligible and can be ignored.

The circuit for HT uses the existing 25V windings, in series, into a voltage doubler circuit producing about 165V DC at 30 mA . The fused output from the series regulator transistor is tapped down by zener diodes to give a range of HT outputs. These are decoupled to minimise noise from the zener diodes. An 'in series' LED is a power on indicator and also extinguishes if the fuse blows.

The heater and grid bias supplies use additional windings. For the particular transformer used these were: 24 feet of 16 x 0.2 mm PVC covered wire for the former. This wire is rated at 3 amps at 70 degrees C. Unloaded output was 5.8V. 30 feet of 7 x 0.2 mm PVC covered wire for the latter. Unloaded output was 7.3V.

Separate windings were used to give isolated supplies. When putting on the wire, take care, when pulling it through the transformer core, that it does not friction burn the turns you have already applied.

For the heater supply the design uses the same IC regulator (LM317T) as used by

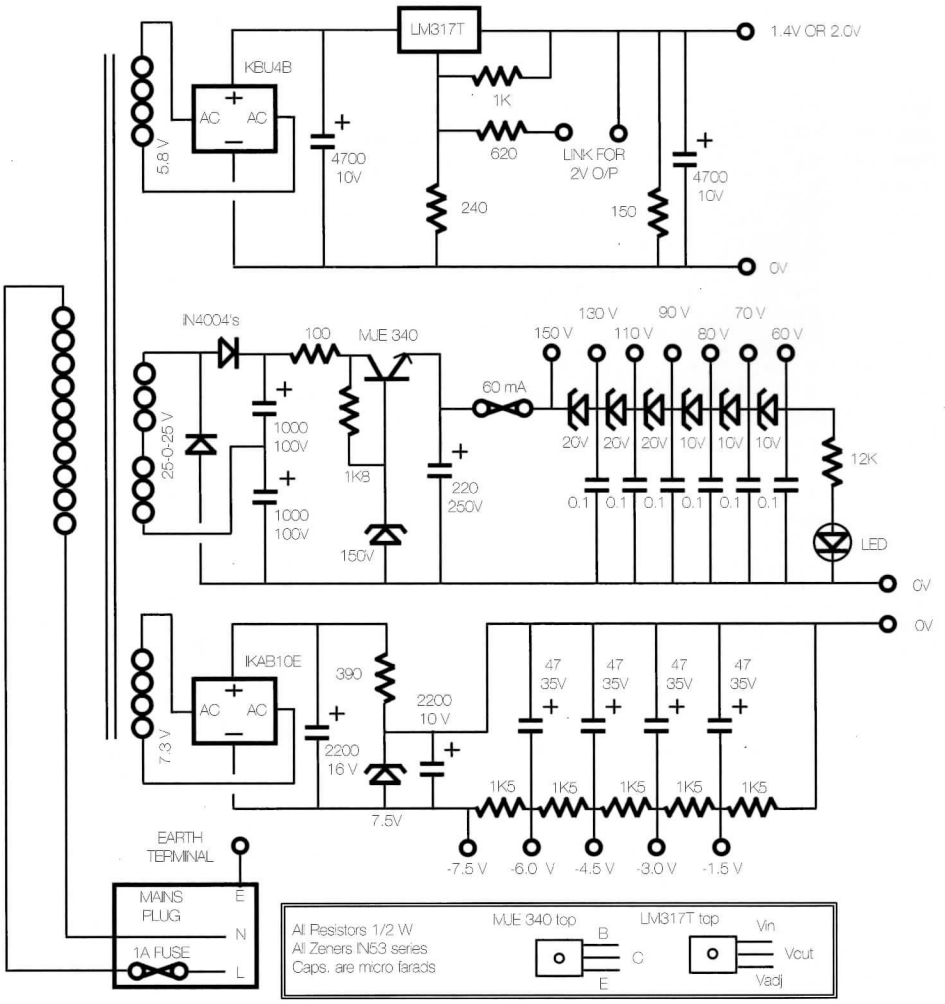

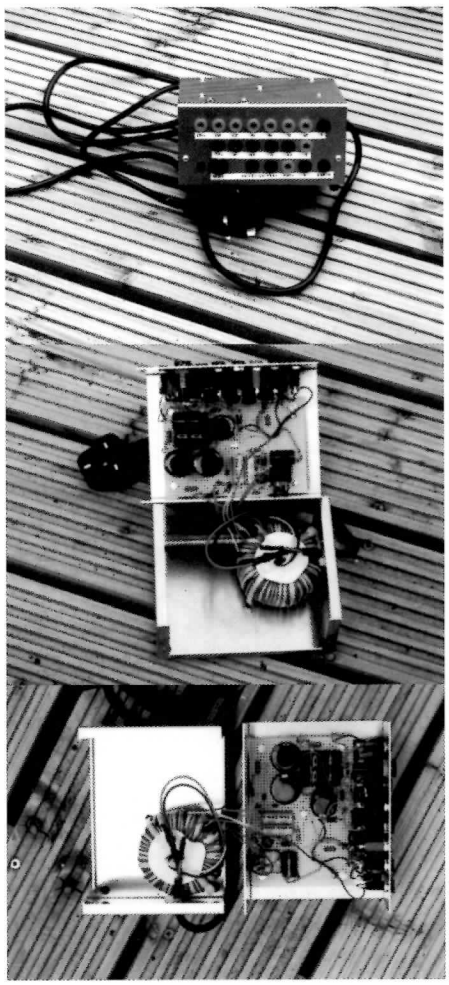

continued on page 36

The Superhet for Beginners part 2

An attempt to explain the principle without mathematics and with the minimum use of jargon. Criticism invited. By Dave Adams

FIRST OF ALL - a message, and apology, to those of you who diligently worked your way through PART ONE. The circuit, the rather intimidating one, on page 32 was wrongly captioned. It is of an early SUPERHET and it was included to provide a comparison with the modern one on the next page. The two same circuits are here again. I hope you will soon appreciate their relevance.

IF YOU ARE A NEW READER - I think you will find this part comprehensible even if you have not tackled PART ONE, so, no need to shift from your comfortable armchair. I hope you might, after reading this, then be emboldened enough to locate and read PART ONE.

The previous instalment dealt with the "why" and the "how" of the INTERMEDIATE FREQUENCY TRANSFORMERS, usually referred to as the "IFs". This one attempts an explanation of the FREQUENCY CHANGER.

I have to begin by surprising you in saying that this is not a true description of what it does. The Americans get a bit nearer in that they call it the MIXER. This, rightly, leads one to ask, "What does it mix?" I hope what follows will make it clear.

Look at both circuits and note the parts highlighted. In each case you are looking at an "oscillator", a circuit that produces a frequency. It is a small transmitter! It would, if it were not well screened, actually interfere with your neighbour's reception. Now note that a triode valve is used in each circuit but the big difference in the modern circuit is that the triode is INSIDE our first valve - the "frequency changer".

This valve is thus receiving input from the aerial circuit AND from this oscillator. The oscillator is so tuned that the frequency it produces is different from the frequency that the aerial circuit is tuned to. This "mixing" of two different frequencies can produce a THIRD. This third one is equal to the difference between the other two. This then is the job that this "frequency changer" valve does. This process goes under the name of "heterodyne". This third frequency is, of course, the "intermediate frequency".

The tuning of the aerial circuit and the tuning of the oscillator are ganged together but the coil and the capacitor of the oscillator have values chosen so that the difference remains the same.

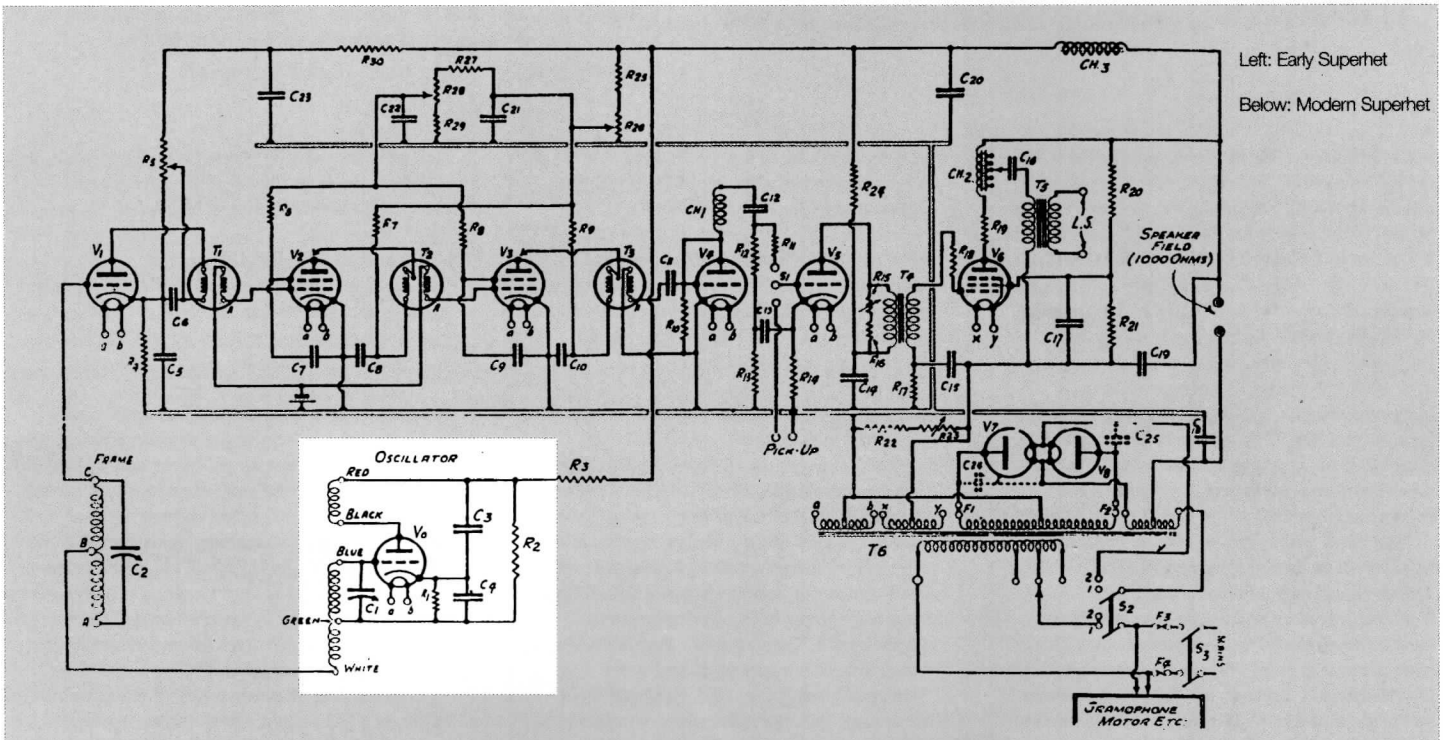

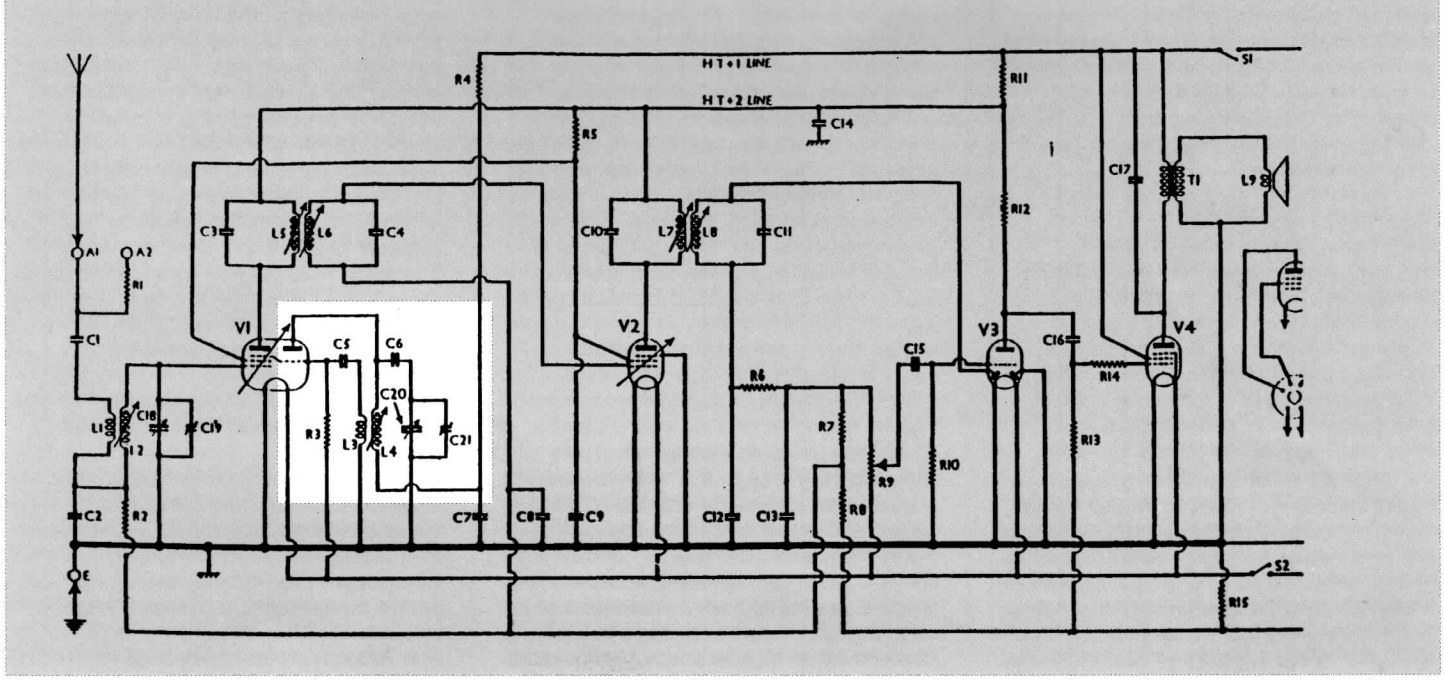

So You Think You Know How To Line Up a Superhet?

An Eddystone bedtime story by Paul Schimmel

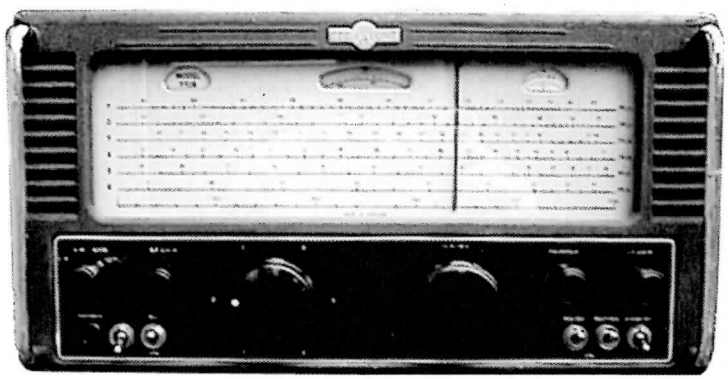

"It works", said the guy behind the stall at the rally, it certainly looked OK. I had been interested in an Eddystone 770R ever since buying an 840C at Harpenden a few years before. The 840C had taught me just how much fun changing Hunts capacitors can be, but after some keyhole surgery and a full re-alignment it was going well. How about complementing it with its higher frequency brother (19-165MHz, AM/FM)? This idea remained unfulfilled for some time; I saw the occasional set, but always in dubious condition ("all the bits removed by the previous owner are in the bag guv!"). I like to buy things as unfiddled with as possible, the possible ravages of time (and Hunts) are as of nothing compared to some ham-fisted 'repairer'.

This set looked reasonable and a deal was done. The set itself weighs 60lbs uses 19 valves and was introduced in approx 1952 (when mine was manufactured). Later a mark II was introduced in a more modern cabinet with the circuit substantially unchanged other than extending the AGC loop to include the RF stage. The wavechange function is performed by a very substantial turret system in which the desired coils and trimmer capacitors are rotated into contact with the tuning circuitry. This would have avoided the problems of stray capacitance/inductance in a conventional switch system working at these frequencies.

The turret incorporates six ranges, the upper two of which (75MHz-114MHz & 105-168MHZ) do not have any adjustable cores in their inductors. Adjustment is made on the low point of these ranges by squeezing and stretching the coils (more on this later). Demodulation options are CW, AM, narrow FM and wide FM. Adjustable muting, noise limiter, IF gain control, S meter and standby switch are also featured. A previous owner of my set had also fitted a front panel switch to bypass the AGC, why I do not know, possibly for CW use when the BFO is on. Judging from the wire used it was done a long time ago.

I connected the set to my roof mounted FM aerial and switched on... ...it worked, just. Classic FM was rather hissy and distorted. A visual inspection of the chassis revealed no Hunts capacitors, just a lot of a waxy looking type which could easily be mistaken for resistors due to their colour banding. I tested all the valves in my AVO VCM which revealed some to be past their best. Replacements were obtained and fitted, performance was slightly improved, but still pretty awful. Further investigation revealed a very sick cathode resistor bypass capacitor on the RF stage. Things improved a bit, perhaps all that was needed now was re-alignment? Here we hit a snag, most RF generators in common circulation don't go much above 30MHz - no use on a set that starts at 19MHz. A friend came to the rescue with the long-term loan of a Taylor AM/FM generator (thanks Terry!). This goes up to 120MHz and incorporates a crystal reference. OK so it's still not fast enough but using harmonics one can get there. This is the minimum standard of equipment sensibly required to work on a set of this kind. I also acquired a Heathkit which goes up to 100MHz on fundamentals.

So now the alignment could begin; here I noticed a problem fairly quickly, the peak alignment varied depending on which oscillator was in use. Observing the output from the oscillators on a 'scope I noticed that the waveform from the Taylor was much more like the classic AM envelope, the Heathkit produced a much more lopsided envelope, it is interesting to speculate what this means in sideband terms, since the detector is a simple diode. This may not matter much, but something was causing differences.

Anyway, using the Taylor things were improving, but still sensitivity seemed low, in particular the normal FM broadcasts were still not strong enough to produce any AGC voltage. Then one day the breakthrough: going up and down the IF strip I realised that one of the 4 stages was hardly contributing anything. The HT supply is fed to each IF stage via a resistor and decoupling capacitor. I had suspected this stage's capacitor before and had checked it by temporarily bypassing it with a new one, this was a mistake. The old cap (one of the resistor lookalikes) had sunk in value from 10pF to 1pF, but as I had aligned it in this state the tuning of this stage was far from where it should have been, hence bypassing alone was not enough to show the problem. Replacing the cap and re-aligning the whole strip yet again bought a 10 fold improvement. Hooray; now I was home and dry... or was I? If one cap was playing up what were the others like? Much earlier I had tested one or two caps using a digital capacitance meter. It had indicated about 11 or 12n for the 10n types; this seemed reasonable. Further investigation using the 15V driven ohms range on my analogue meter showed the problem: the cap meter was reading high because of leakage. Testing more of the resistor lookalikes showed them all to be either leaky as hell or 1pF: they were all going to have to come out. This meant changing approx 35 capacitors in all - not a small job on such a tightly packed set. Eventually it was done after locating suitable replacements for all the values required - itself not so easy these days.

The big improvement was in the muting circuit, which now functioned with a snap on/off action much like a modern hi-fi tuner - impressive. In fact when I first acquired the set the muting had not worked at all, it only began to respond, albeit slowly, when I changed the valve socket used by the noise amplifier. This was curious since the original was a McMurdo which I normally consider to be good quality. So far I have had to change two sockets which just seem to have lost their contact springiness.

Things had improved, but there was still no sign of AGC (except when applying very large test signals). The service manual I have for the set is actually for the Navy version, but there is little difference from the 'civilian' version. The IF alignment procedure given was to connect the generator to the last stage first then work backwards towards the mixer attenuating as necessary. By this time I had done this many times and could probably have done it blindfolded; then it occurred to me - as the generator is connected it will have an effect on the stray capacitance present in the circuit. Therefore when the generator is removed and moved to the next stage the alignment will be fractionally out. This time once I reached the mixer I peaked up all the previous cores; this made a big difference. Finally I had some AGC on Radio 4!

So all done then? - Er no. Now another problem which had been apparent for a while became even more obvious: The 770R has a front panel Aerial trimmer which tunes the input stage of the RF amp. As this was rotated at some points on range 2 the RF amp was obviously bursting into oscillation. Now Eddystone presumably suffered from this

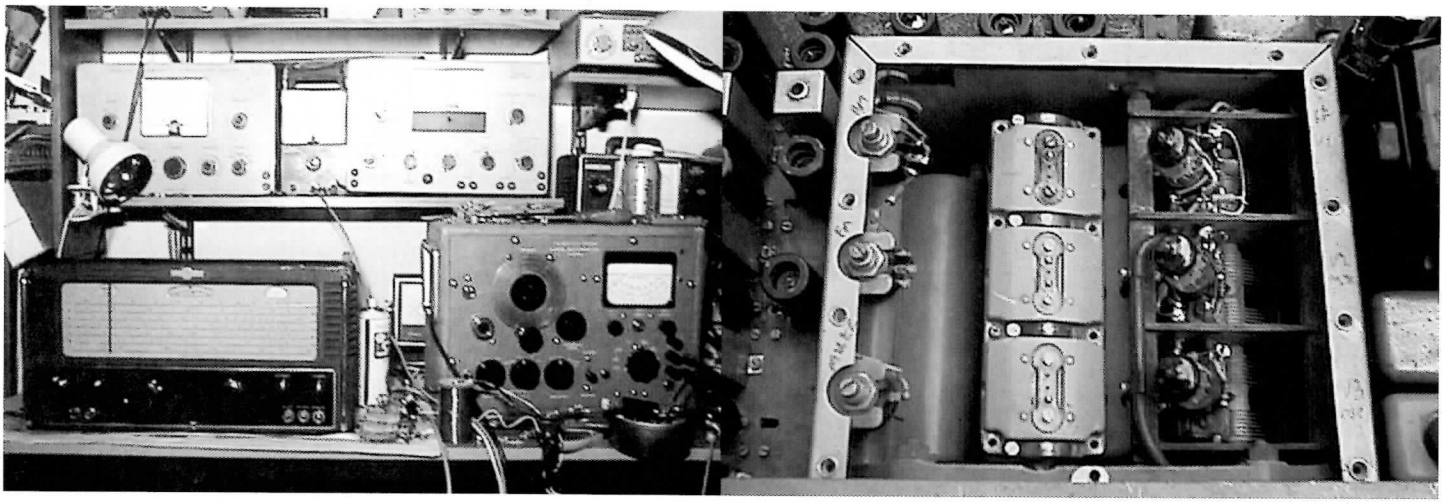

a bit themselves since a 12 ohm grid stopper is included in the RF stage. Increasing the value of this resistor improved matters, but take it too far and RF gain is compromised since a lowpass filter is being formed by this resistor and Cin of the first valve. Much experimentation eventually led to the discovery that the effect was markedly reduced by adding extra heater decoupling (there are already feedthrough capacitors, which I would have thought would be enough at the frequencies giving trouble ~100MHz).

So with the IF sorted, time for a realign of OSC/RF stages on each range. Here another problem became obvious: with the high levels of IF gain now available and the frequencies in use, any movement in the proximity of the turret caused a large effect in output level. The only way I found around this was to reduce the IF gain control, increase the input and hope that this would have a negligible effect on the alignment - this seems to be true.

So now on to ranges 1 & 2, Here the inductors are adjusted by squeeze 'n' stretch. The accuracy that can be achieved in this way is obviously less than for an adjustable core. This is acknowledged by Eddystone who give tuning accuracy on ranges 1&2 as 1% but 0.5% on the others. Squeezing a coil reduces the inductance and so raises resonant frequency for a given C.

Alignment on range 2 was pretty close already, but it was on range 1 that the problems really began. The image rejection gets poorer as the frequency increases; this means that if the stage is slightly misaligned it can get very difficult to tell whether you are adjusting to the main or the image response. The only way I found around this was to continuously check that the image was always above. In common with most superhets the local oscillator runs faster than the tuned frequency. The 770R IF frequency is 5.2MHz; therefore if a signal is tuned at 150MHz there will be an image response at 160.4MHz.

I had great difficulty aligning range 1 at the low end, the adjustment afforded by squeeze 'n' stretch was not sufficient. Here I encountered something unexpected: the range 1 coils are a single turn only, formulas given in reference books normally refer to multiturn types. With a multiturn coil increasing the diameter increases the inductance. On the 770R I found the opposite to be true for the oscillator coil - whether this means that, in fact, stray capacitance is dominating I don't know.

By now the rather early plastic that the coils are mounted on had began to crack up under the strain. I phoned Centre electronics who had no range 1 packs left (surprise, surprise) but they did have range 2 which would give me some new parts; this I duly ordered. The chap there also said that these sets can be spoiled on range 1 by people trying to tweak them up for 2m band use. Also the turret can apparently suffer from leakage due to insulation breakdown.

I have now rebuilt the range 1 coil pack and aligned it. This has been made easier by my acquisition of a Marconi TF913 FM receiver tester. This unit covers the full frequency range on fundamentals and has a very accurate dial. (Does anyone have the circuit diagram?)

Meanwhile I have put a wideband discone type aerial in the loft and this has given me better reception of aircraft etc.

So I now have two outstanding problems:
1) the instability in the RF amp.
2) even with many hours spent optimising alignment range 1 is still approx. 15dB less sensitive than range 2.

With a standard MW/LW job it is relatively easy to judge performance subjectively (does a good spin of the dial reveal plenty of stations etc.). On a more specialist set it gets very difficult to know when the end has been reached; how good was it when it left the factory?

This an unusual renovation report in that
A) I have not finished the job yet!
B) I have not mentioned the cosmetics.

In fact I have not done much cosmetically other than clean the glass. I don't normally bother much with cosmetics until I know that the unit is working well enough to justify it. I will need to retouch the crackle paint at some time. I have also re-greased and adjusted the turret gearbox mechanism since any slop here also causes tuning drift.There are plenty of other things that have needed attention which I have not bothered to document in this report, and I must have now spent literally hundreds of hours working on this set - and it's still not over!.

In closing I would be very interested to hear from anyone else who has rebuilt one of these receivers to hear of their experiences. I would also like to thank Terry Martini, Peter Baxter and others who have provided help and sympathy in appropriate measures.

Paul Schimmel Tel 01438 726204.

Eddystone saved!

by Graeme Wormald G3GGL

Members of the Eddystone User Group are thrilled that the Company has been rescued from closure by a last minute takeover, according to a Press Release from Megahertz Communications Ltd of Cambridge.

Eddystone short-wave sets were first marketed throughout the world in 1927/8 to receive the Empire broadcasts from Gerald Marcuse's station, G2NM, and later the BBC. They have been manufactured continuously until the present day.

The sets were originally made by Stratton & Company, Birmingham; manufacturers of hairpins & fancy goods, who turned to wireless components in 1923. Women's new short hair fashions ('the Eton crop') dramatically reduced the sale of hairpins, leaving excess capacity at the factory. The Eddystone trademark was adopted for the radio components and later the sets.

In 1965 the Company was acquired by Marconi, who in turn were acquired by the GEC. Sets continued to be sold in the High Street until 1977, by which time foreign competition was taking over the market.

Eddystone continued with high-grade professional receivers, which are still available to order. In association with the BBC they added VHF/FM broadcast transmitters to their catalogue. In recent years they have worked to develop Digital Radio, transmitters for Band III (220MHz), a field in which they excel.

The User Group caters specially for enthusiasts who collect the great variety of Eddystone valve and early solid state sets. Full details may be obtained from me at :

15 Sabrina Drive
Bewdley
Worcestershire DY12 2RJ
Tel: 01299 40 3372

Letters

Above: Nigel Moriss' Mohawk 'one dial'.

Above: Frank Hawkins and friend plus brand-new Pyes.

Dear Editor
Please find enclosed some photographs that might be of interest to other readers. It is currently under restoration in the workshop after being purchased from a local antiques centre.

I require a circuit diagram or any other information on the sets reproduced above. It is a Mohawk 'one dial' circa 1928 made by the Mohawk Corporation of Illinios (established 1920), Chicago USA. It is a Medium wave band set, 6 triode and 3 gang condenser, it has an oak cabinet believed to date from 1928. The balanced armature loudspeaker is made by 'Wirt' of Philadelphia and is contemporary with the wireless set.

I would be grateful if any other members could shed further light on this interesting set.

The TRF in the background also needs identifying and the makers name begins with the letter 'A' (this also appears on the knobs). It has many 'KB' parts and probably dates from about 1931. Thank you for an excellent publication.

Best wishes
Nigel J. Morris

Dear Editor,
I have in my collection an item made by Philips probably late 20's or early 30's, I have asked several people with radio knowledge including Steve Harris (On The Air, Chester) but to no avail.

The item is round with a diameter of six inches and eight and a half inches long, at the front it has 1 knob and a dial which reads 0 to 100, both ends are bakelite and at the rear it has 6 plug connectors Numbered 1 to 6, it stands on 4 feet and the body is made of Arbolite, it is a sealed unit which has not been broken and I don't intend to open, there is a plate on the rear marked philips Holland type 418O NR 9435F.

I would be very pleased if you can help me in any way and also supply a circuit diagram as to its application. if anyone is interested in it I would be only too pleased to negotiate.

yours sincerely
Mr George Glendinning
West Winds, Kirkbampton
Carlisle, Cumbria
CA5 6HX
Telephone: 01228 576618

Dear Editor,
With reference to Ian MacWhirter's letter in Vol 24 number 2 on "Repairing valves". In this Ian writes about using Dag to restore a metallic coating to old valves. I have not had reason to try it but Radio Spares do three 400 ml aerosol shielding sprays. Two are based on nickel and the other on silver/copper. All achieve resistivities of between 0.3 and 0.7 ohms. They are not cheap but would probably do quite a few valves. Prices range from £15.59 to £20.95. I would imagine they would be very much easier to apply than Dag and give a neater result.

Yours Sincerely
Gary Tempest

Dear Editor,
I attach a photograph showing myself on the right hand side showing off the then-new Pye 'Baby Q' at the tender age of 17 years, it was quite something to have unpacked such a wonderful set.

On the steps between my workmate and I are 2 Pye showcards and on one I am able to read with the help of a magnifying glass: 'Give him a Pye, it sounds better'. And it did.

Happy days.

Yours Sincerely
Frank Hawkins

Dear Editor,
Greetings from 'Wild Wales', where I've been delighted to have a bagful of Bulletins from one of my 'flock' - appropriate for a goat-herd! (keeps me fit in my retirement). I detect (sic) echoes of a former 'Bulletin' when that was the 'voice' of a true 'Society'. Around here, Radio/Wireless/Audio interest is very much a minority 'voice', even the five year stint at Llandovery College is but a nice memory these past years.

Fortunately I have a good memory, but having been brought up on glass jars (accumulators or Leyden respectively) and dc mains 'poker' soldering irons with progression through EMI, the RAF, various Ministries (governmental), the BBC and Technical Education, it is fairly easy to be catholic in my acceptance of various friends degrees of fanaticism ("it's only a hobby" ...for some!) all helps to keep the dust from settling too deeply on a busy half-century of wireless experiences.

In your Winter '96 issue, I'm impressed by the honesty of Tony Voysey's article on eliminators - a thorny problem still, even with 'crystal valves'. Perhaps in the interim he (and other readers) have been inundated with technical advice but here goes:-

Firstly; delight at his use of a proper 'double wound' transformer (ac/dc even ex-USA 'auto' transformers are 'bad news' - fairly easily made safer using toroidal transformers, whose close-knit magnetic field, high efficiency, make up for the **need** for full-wave rectification). This brings me nicely to the HT provision (on page 22) by adding a negative-producing circuit 'below' the existing one, **both** half-waves of the higher voltage winding will be loading the transformer, easing its magnetic problems and providing lots of excess voltage (the better to smooth the output). As there are Zener diodes, in preferred values at various

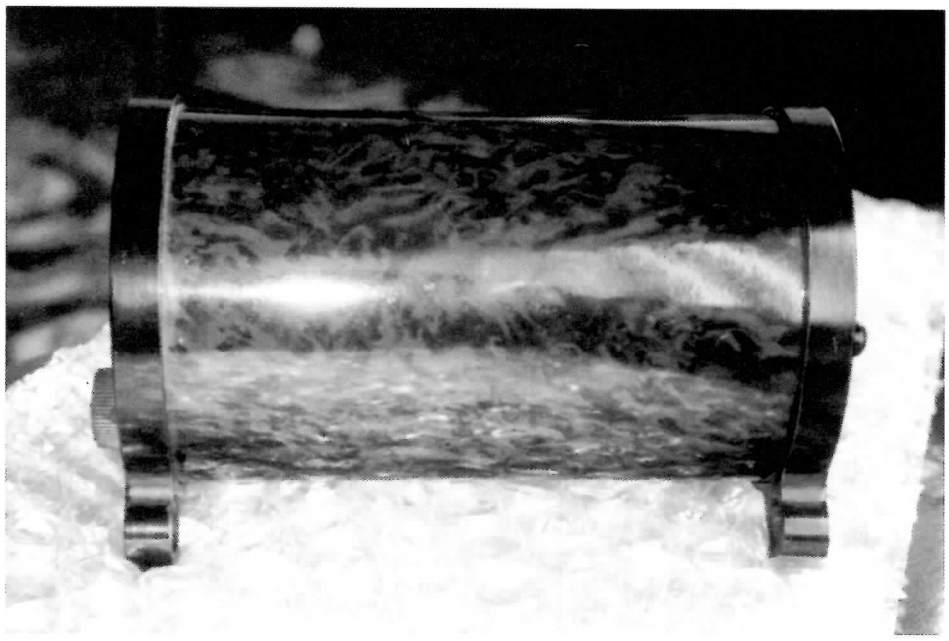

George Glendinning's Philips artifact. Actually a wavetrap for tuning out interference from local stations.

dissipations (but supporting positive-voltage at their kathodes - or 'marked' ends) it is as well to incorporate a few as needed, ...or as available! Something along the line of my diagram: (See right hand side—Editor)

The rectifying diodes can be IN 4000 series (high last number), the Zener diodes all have their kathodes 'up' with their individual voltages adding (to give 90 volts), the permitted current controlled by R3, to about twice the receiver's HT load (with the receiver off!). Using Half-a-dozen 0.3W 15V Zeners (they are quite cheap) will yield 90 Volts, an idling current of 20 mA will keep them 'on the boil' (less when the set is gobbling up to 18 mA, so try and check the 'consumption'). The value of R3 'makes up' the remaining HT voltage produced by the +ve & -ve rectifiers *at* 20 mA loading, R1 & R2 both equal, 2000Ω giving a 10:1 reduction in ripple (both are half-wave circuits) at the 'cost' of 40 volts. Also use the 8μF on the reservoir side, to ease the charging currents available from silicon diodes.

Of course, a real moving-coil multimeter is needed, even a modest little 2000Ω/V one.

Yours sincerely
Wyn Mainwaring I Eng, MIIE (radio), Maenordeilo, Carms, Wales

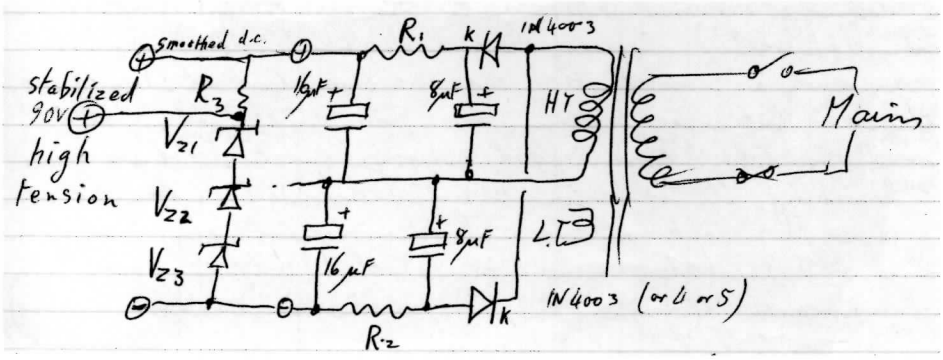

Dear Editor,
I may as well get my three shillings and ninepence worth (that's 19p to our younger adherents), and add a couple of comments on the contents of the Winter 98 Bulletin that involved myself in various ways:
1 The Marconi centenaries in '98 and the Osborne House (actually the cottages near the North gateway) and the confusingly named steam-yacht; Osborne (slightly shorter than the Royal yacht) referred to as the Prince of Wales' floating gin-palace, anchored in Cowes 'roads' on August 4th of that year. When I lived in Cowes I was able to to engage the services of Mr John Fulford, a local artist to paint the scene as it would have been at the time!

As verger of the R.Y.S. 'chapel', introduction to Mr Spencer Herépath, one-time archivist to the Royal yacht squadron, was arranged giving me enthusiastic access to the Weather and Racing Records. John - himself a boat builder, spent many hours out in the 'roads', taking bearings, sights and making sketches. The finished painting is magnificent and now hangs in the maritime Museum, held in trust by the Cowes Town Council. Copies are on display at the two Wireless Museums curated by my dear friend Douglas Byrne G3KPO and one was sent to the agency that looks after Osborne House. We have a copy here, complementing the famous painting of much the same scene by Brannon.
2 In the Autumn '98 issue, the article 'Black propaganda' brought to mind the antics of a similar nature that were still being 'carried on' by the BBC in the early 70's(!). Again I'll limit comment to the matters that affected me. While a 'shift engineer' at the Washford Transmitting Station (we're of synoptic 'vintage'!) - still on DC mains!
(a) Following some sleepless (but interesting) night-shifts of monitoring during our 'quiet hours' (i.e both 'halves' of the split S.T.C. - CM10, 100kW capability a.m transmitters were 'dead and cold') using the BRT 400 receiver in the screened-test room, still able to 'bend the needle' from the two pairs of CV4 crystal oscillators (next door) on 881 kHz and 1214 kHz but more particularly the new emanations on 1602 kHz! and (shuffled numbers note) 6120 kHz, from a ship off Holland ...radio Nord Zee... having to log etc. and lose our precious hours 'kip'. Quite some time later, I had to 'tweak up' the 10kW mobile installation (parked outside) and fit in a new crystal... for 1602 kHz! I was not allowed to 'go away' with the outfit during its 6 month 'jamming' of the 'pirate', being disgusted with the sand and filth all over the once-lovely mobile broadcasting station (see Radio Bygones Feb/Mar '93) when it eventually limped home.
(b) Another 'skirmish' with the 'powers that be' concerned the frequency used by Clevedon (West of England Radio 4) who, had the the channel until after the shipping WX forecast, its timing being more variable than the Radio Times suggested. Several nights around ten to midnight I would ring a special number and make my displeasure felt at the premature heterodyne on a BBC frequency! Being newly resigned from Government office, I still remembered the 'way to do it': Invariably, instant disappearance of offending carrier, and apology.

Yours sincerely
Wyn Mainwaring I Eng, MIIE (radio), Maenordeilo, Carms, Wales

Dear Editor,
Thank you for publishing the review of my Magic of Sony book in issue 2 of the Bulletin.

However somebody (that's me! - Editor) has got their figures wrong as the book costs £18.00 + £2.00 p&p.

Also you may let the reviewer know that there are other rewards for publishing a book which go beyond their hypothesis. My reason is not mentioned in the review and, if you must know, it is simply PLEASURE.

Ciao
Enrico Tedeschi

BVWS Minutes

Minutes of BVWS Committee meeting held on Thursday 6 May 1999 at 5 Templewood, Ealing

Present: Mike Barker (chair), Jeffrey Borinsky, Ian Higginbottom, Guy Peskett, Carl Glover

1. Apologies: Steve Sidaway

2. Minutes of meeting held on 28 Jan 1999
Item 7, JB reported that the cost of producing the History of the BVWS had been £8816 inc VAT and was below the estimate we had accepted. The minutes were then approved.

3. MB reported that the number of paid-up members stood at 1184 and that there were 99 yet to renew.

4. CG tabled two proofs of the summer Bulletin which were taken up for reading by IH and MB. The aim was that the Bulletins should reach the mailing team by 22 May. CG reported that the autumn Bulletin was about 1/4 complete.

5. JB tabled provisional accounts for the year ended 5 April 1999. He explained that the unusually large surplus was due to the timing of invoices for production of Bulletins.

6. The arrangements for distribution of the History of the BVWS to members who could not collect them at events were finalised. The price of postage and packing was calculated to be £4 for UK members and £8 for overseas members. It will be advertised that requests for mailing should be sent to MB in the first instance. Additional Committee members will be nominated if assistance is required.

7. IH reported that the list of members advertisements to accompany the summer Bulletin would probably close on 21 May.

8. The need for written conditions for Society auctions was addressed. GP was asked to produce a draft.

9. It was agreed that the chairman should send a written warning to a member for flagrant breaches of the Society's rules on early trading.

10. It was agreed that the Society will rent 30 square feet of secure self storage to accommodate the stock of publications.

11. GP reported on the survey of members interests and needs carried out at this years renewal. By far the most significant interest was in restoration and the greatest need expressed was for service data and information on sources of parts. It was hoped that the inclusion of members interests in the Handbook this year would enable members carrying out restoration to contact each other and perhaps exchange components. Suggestions for inclusions in the Handbook included details of Wireless museums and members call signs and e-mail addresses.

12. AOB
It was agreed that the BVWS stand at the NEC would be manned from the time of general opening. It was agreed that Committee members may spend up to £200 on the Treasurer's sole authorisation. Receipts and accounts would be required. CG agreed to produce sample designs of Christmas cards for 1999. It was envisaged that around 4 cards may be sent to members.

The date of the next meeting was fixed for July 1st at Templewood. The meeting closed at 2300 Hrs.

Another Battery Eliminator continued

Andrew Zimmer. A shorting link changes the voltage from 1.4V to 2.0V. Accidentally pulling the link out drops the voltage rather than raising it. The output has a 10 mA or so minimum load resistor, which improves regulation slightly between no load and full load.

The GB supply uses another bridge regulator and zener diode. The output from this is tapped down to give a range of bias settings with decoupling on individual outputs.

Construction is reasonably easy. An aluminium box (6" L x 4.5" D x 3" H) from Maplin Electronics was used. Most components are mounted on a plain piece of matrix board and are connected by tinned copper wire with silicon sleeving. Some components were mounted directly on the output terminals. Natural for this are the zener diodes for the HT tappings and the resistors for GB. For terminals I used 4 mm banana sockets simply because I had them. Two lengths of copper wire were stretched around the end terminals, with the loops soldered, to create 'bus bars' to connect the low side of the decoupling capacitors. The transistor and regulator IC were bolted to the inside of the box using insulating kits. Note that there is a separate terminal connected to mains earth to allow bonding of individual outputs. With the extra windings the supplied securing bolt, for the transformer, is now too short. I used two cable ties, through a hole either side of the coil, and one in the centre, to secure it to the bottom of the box. The bottom of the box was fitted with a small rubber foot at each corner.

This type of circuit is not critical so try to use what you have to hand. Decoupling capacitors up or down a size or even smaller values in parallel will be fine. Rectifier diodes are not critical as long as their peak inverse voltage and current ratings are adequate for the job. The transformer can be changed to a lower VA type with say 20-0-20 volt windings. This will be cheaper but limit the maximum HT voltage to about 120V. Wind on say 10 turns of wire first and measure the voltage. From this it is simple to work out the turns per volt and from this how many turns are needed for the actual additional windings.

References:

Constructing a Universal battery eliminator. Volume 21, Number 3, Autumn 1996.
High Frequency Battery Eliminator. Volume 23, Number 3, Autumn 1998.

Book Review.

Historical Sony 1955-1963

Author & Publisher Enrico Tedeschi
Reviewed by Robert Chesters

I love books with lots of pictures. You can imagine my delight when I came across this little pocket sized companion to The Magic of Sony by E. Tedeschi. Lots of pictures of rather cute looking transistor sets. What you would not expect was my initial puzzlement at finding a "book" that was nothing more than an A4 sheet with most of the pictures the wrong way up.

If you know how hard of thinking I am then perhaps you would not be so surprised. All was to resolve itself when the page was folded up and deftly sliced along two sides. Suddenly I was holding a handy 16 page aide memoir to my transistor set foraging. "How ingenious" I exclaimed, genuinely impressed by such a novel idea.

Being a supplementary booklet it does not set out to explain all, but does give the bare necessities such as date and type. Where it does get a little confusing is in the last section about post 1963 sets as a number of these are undated, but maybe the reader should do some research for themselves -we can't expect to be spoon-fed forever.

In summary, I am impressed by this useful and imaginative little supplement.

Vintage VideoNews™

Internet and collecting history was made on the 14th June 1999 as radio historian, writer and collector Enrico Tedeschi announced his plan to start a vintage electronics daily video news broadcast on the internet. The daily transmission will be known as 'Vintage VideoNews™', which is made possible by recent technological improvements in the handling of video and sound over the internet thus making this technology easy for anyone to use.

Transmissions will occur at 6.05pm daily, a chat among viewers is planned after transmission. For further details please go to www.Brighton-uk.com. Enrico Tedeschi

Back issues

Vol 10 Numbers 2, 3 & 4 Inc. The KB Masterpiece, Extinct Species "A Monster Defiant".

Vol 11 Numbers 1, 2, 3, 4 Inc. BTH VR3 (1924) receiver, Marconi's 1897 tests, Origin of the term 'Radio', Baird or Jenkins first with TV?

Vol 12 Numbers 1, 2, 3, 4 Inc. the Emor Globe, The Fultograph, Ekco Coloured Cabinets.

Vol 13 Numbers 1, 2, 3 Inc. Direct action tuning, The Philips 2514, Noctovision.

Vol 14 Numbers 1, 2, 3, 4 Inc. Cable broadcasting in the 1930's, The story of the Screen Grid.

Vol 15 Numbers 2, 3, 4 Inc. The wartime Civilian Receiver, Coherers in action, Vintage Vision.

Vol 16 Numbers 1, 2, 3, 4 Inc. The Stenode, The Philips 2511, Inside the Round Ekco's.

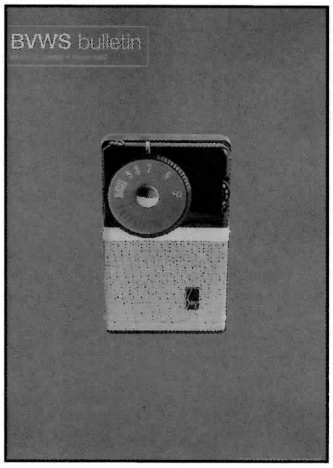

Vol 17 Numbers 1, 3, 4, 5, 6 Inc. Wattless Mains Droppers, The First Philips set, Receiver Techniques.

Vol 18 Numbers 3, 4, 5 Inc. The First Transistor radio, The AVO Valve tester, The way it was.

Vol 19 Numbers 1, 2, 3, 4, 5, 6 Inc. The Birth of the Transistor, Super Inductance and all that, reflex circuits, A Murphy Radio display, restoration.

Vol 20 Numbers 1, 2, 4, 5, 6 Inc. Radio Instruments Ltd., Japanese shirt pocket radios, Philco 'peoples set', notes on piano-keys, the story of Pilot Radio, the Ever Ready company from the inside, the Cambridge international, the AWA Radiolette, this Murphy tunes itself!

Vol 21 Numbers 1, 2, 3, 4 Inc. Marconi in postcards, the Defiant M900, GPO registration No.s, Personal portables, the transmission of time signals by wireless, the Ekco A23, historic equipment from the early marine era, the birth pains of radio, inside the BM20, plastics, Ferdinand Braun, pioneer of wireless telegraphy, that was the weekend that was, the first bakelite radios, BVWS - the first five years, the world of cathedrals, Pam 710.

Vol 22 Numbers 1, 2, 3, 4 inc. Another AD65 story, the Marconiphone P20B & P17B, listening in, communication *with* wires, the story of Sudbury radio supply, French collection, Zenith Trans-oceanics, Farnham show, Alba's baby, the first Murphy television receiver, AJS receivers, Fellows magneto Company, Ekco RS3, Black Propaganda.

Vol 23 Number 1, 2, 3, 4 inc. Sonora Sonorette, Bush SUG3, RNAS Transmitter type 52b, North American 'Woodies'.

Supplements:
1 'The story of Burndept'.
2 'WW 1927 data sheet'
3 'Seeing by wireless' the story of Baird Television
4 reproduction Marconi catalogue

Earlier Bulletins and supplements are priced at £2:00 each + postage. Bulletins from volume 21 onwards are priced at £2.50 each. + postage.

Postage:
for individual bulletins add 50p, for 2-5 bulletins add £1.50, for 6 or more add an extra 30p each. 23 Rosendale Road, West Dulwich London SE21 8DS Telephone 0181 670 3667. Cheques to be made payable to 'The Vintage Wireless Museum'.

News and Meetings

Radio before Hertz and Marconi

It was in 1888 that Hertz disclosed details of his experiments that demonstrated the existence of electromagnetic waves and it was a few years later that Marconi and others started to develop ways of using these waves for practical radio communication. Before Hertz had started his experiments, however, several experimenters had stumbled across ways of electrically transmitting signals through space. The stories of four of these experimenters: Elihu Thomson, David Edward Hughes, Amos Emerson Dolbear and Thomas Alva Edison will be recounted in a lecture on 'Radio before Hertz and Marconi' to be given by Lorin Knight at the IEE. These experimenters did not understand what they had discovered and some of the explanations they gave were remote from reality. For various reasons their discoveries were not followed up. Today, taking advantage of the increase in scientific knowledge over the last century, it seems quite clear that all four were using Hertzian waves, ie they were using true radio communication. the lecture is taking place on 12 October 1999 at 5.30pm (tea at 5.00pm) at the Institute of Electrical Engineers, Savoy Place, London, WC2R 0BL. Admission is free and non-members are welcome. For further details contact the IEE Events office, tel. no +44 (0)20 7344 5732/3

Wootton Bassett meetings

Mike Barker will be organising a swapmeet on **5th December.**

Harpenden meetings

There will be a swapmeet on **5th September**, and a swapmeet on the **28th of November**.

Portishead meetings

There will be a swapmeet on Sunday the **19th of September**.

NEC Meetings

Jonathan Hill's 'National Vintage Communication Fair' meeting will occur on **October 24th**. For further details on the NVCF please refer to the advertisement on page 2.

Southborough Meetings

John Howes will be holding a Southborough swapmeet on **October 17th.** Bookings/enquiries (01892) 540022.

Shifnal Meetings

Chas Miller of 'Radiophile' fame will be holding a meeting on the **3rd October.**

North American meetings

4th - 7th August: ARCI Radiofest XVIII, Elgin, Illinois. Further details to follow when known.
1st - 4th September: AWA annual meet, Rochester, New York

Harpenden meetings 2000

There will be an auction, a restoration contest and the AGM on Sunday **5th of March.** Sunday the **11th June** hosts a swapmeet. Autumn is heralded with a swapmeet on **3rd September**, and the year finishes with a swapmeet on the **26th of November**.

Gerald Wells' garden party 2000

Gerry Wells will be having a garden party on Saturday **10th June** at the Vintage Wireless Museum, 23 Rosendale Road, West Dulwich, London SE21 8DS. Telephone 0181 670 3667.

New Articles

If you have anything interesting to say concerning Wireless, Television, Broadcasting, Collecting etc. please send it to the Editor for future publication in the BVWS Bulletin, as the Bulletin is only as interesting as the articles that comprise it. We welcome all suggestions and comments regarding the new appearance of the Bulletin and hope that it is catering to your needs as a collector / enthusiast / historian. Your article can be just a few paragraphs long as long as you think it conveys its message across to your fellow members.

Also if you have any photographic material that would look good in the Bulletin, don't hesitate to post it to the Editor. The chances are that I will definitely use it!

Please send all articles to: Carl Glover, c/o Runciter Corporation, 33 Rangers Square, London SE10 8HR.

Wanted by collector

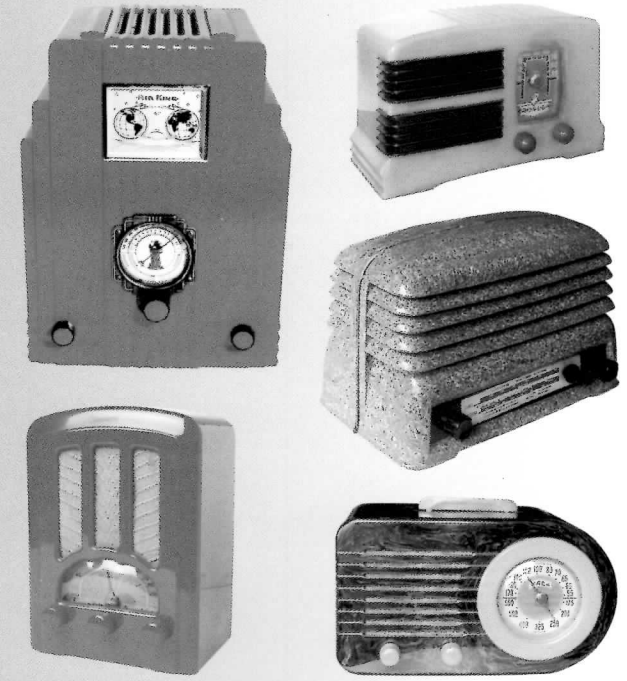

Top prices paid for
Coloured KB BM20's, Air King 'skyscraper' Catalin Sets and Coloured Bakelites

Carl Glover c/o Runciter Corporation, 33 Rangers Square
London SE10 8HR | Tel / Fax: 0181 469 2904

DREWEATT NEATE

FINE ART AUCTIONEERS ESTABLISHED 1759

COLLECTORS' SALE

to be held at Donnington Priory, Newbury Berkshire on

Wednesday 13th October 1999 at 10.00 a.m.

featuring the major part of the important Duncan Neale vintage wireless collection

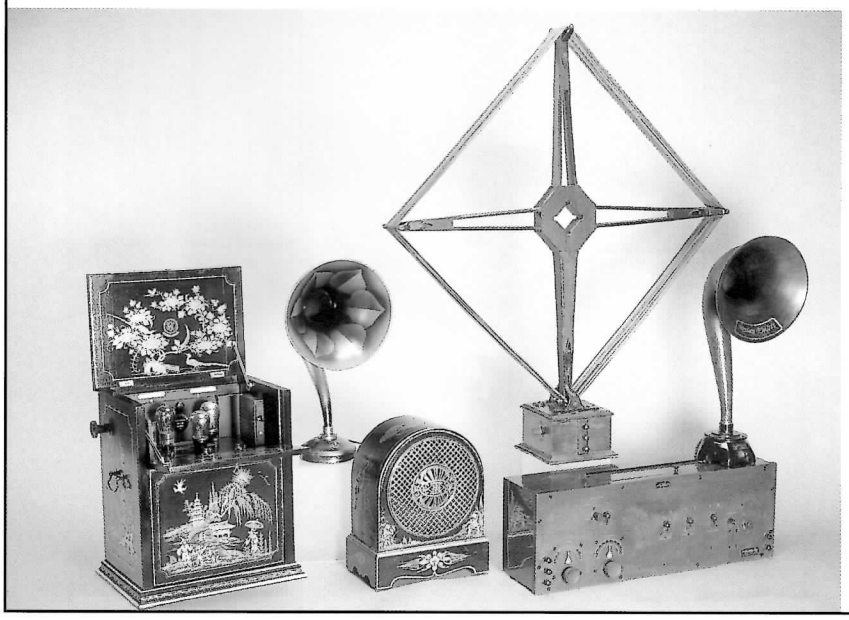

including: 45 valve receivers, 40 crystal sets, 40 horn speakers, 25 cabinet speakers, and many other items by manufacturers such as AJS, Allscott, Amplion, ATM, Atwater Kent, SG Brown, BSA, BTH, Burndept, Celestion, Eddystone, Ediswan, Ensign, Ericsson, FADA, Gecophone, McMichael, Magnavox, Marconiphone, Met-Vick, Osram, Philips, Radio Communication Co., Radionette, Western Electric, Westinghouse and others; in all around 200 lots, plus a wide selection of other collectors' items

Catalogues:
available late September, £7.00 including postage

Enquiries:
Dick Henrywood

Dreweatt Neate, Donnington Priory
Donnington, Newbury, Berkshire RG14 2JE
Telephone 01635 553553 Facsimile 01635 553599
E-mail:fineart@dreweatt-neate.co.uk
Visit our website for current catalogues, illustrations of major lots and a free word search facility
http://www.dreweatt-neate.co.uk

Left: Items from the collection including a Marconiphone V3 in a fine japanned cabinet, and a Western Electric 44002 receiver with matching frame aerial


MARCONIPHONE
WAVE-LENGTH
340-440
METRES
A.D.40508
D.E.R.